Document No.	QR4-700-T-003
REV.	A/0

REV.	DESCRIPTION	REVISOR	DATE	APPROVED
0		ZC.Wu	05.04.2015	David

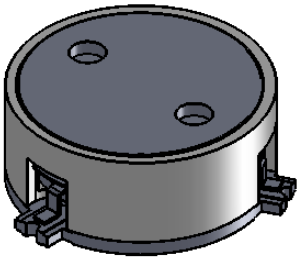

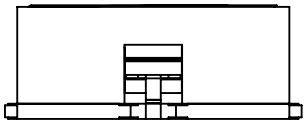

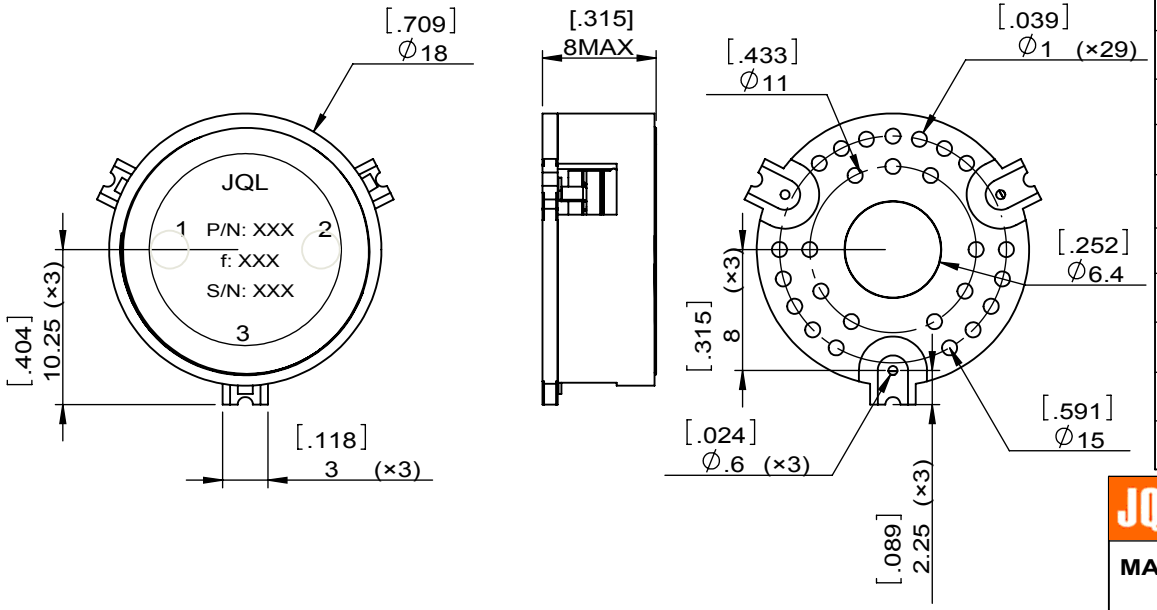

SPECIFICATIONS	
Part's Number	JCM1200T1400S5R
Frequency(GHz)	1.200~1.40
Direction	CW
Insertion Loss(dB)MAX	0.3
Isolation(dB)MIN	20.0
Return Loss(dB)MIN	20.0
3rd IMD(dBc)MAX	-
Power FWD/REV/PK(Watt)	50/50/1200(pulse width=50us)
Operating Temperature(°C)	-30~+75
Storage Temperature(°C)	-
2nd/3rd Harmonic(dBc)	-
Termination/Attenuator(Watt/dB)	-
Tab(W×LG×THK)(mm[Inch])	-
Additional Notes	-

JQL Electronic Inc

MATERIAL: STEEL	**DWG NO:** JCM1200T1400S5R			
SURFACE TREATMENT: NICKEL PLATING	DWG BY:	ZC.Wu	05.04.2015	SCALE
	CHK'D BY:			1:1
DESCRIPTION: SMT CIRCULATOR	APPV'D BY:			
	Unit: mm[inch]	Tolerance: Liner: ±0.25 Anguar: ±0.5°	The First:	A4

RoHS COMPLIANCE

This document is the property of JQL Electronic Inc.
It cannot be copied, duplicated, used for manufacturing purposes or communicated to third party as a whole or partly, without the written consent of JQL Electronic Inc.

WEIGHT:

SHEET 1 OF 1