Document No.	QR4-700-T-003
REV.	A/0

REV.	DESCRIPTION	REVISOR	DATE	APPROVED
0		LJ.Zhang	03.25.2014	David

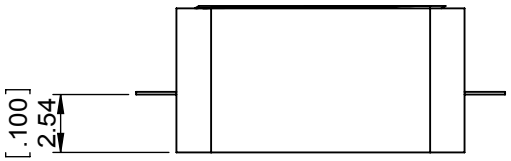

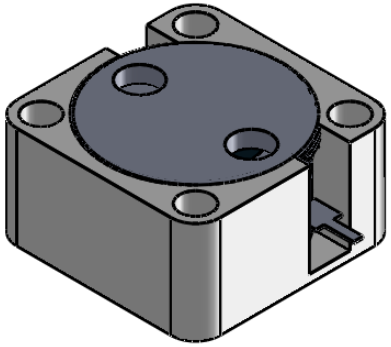

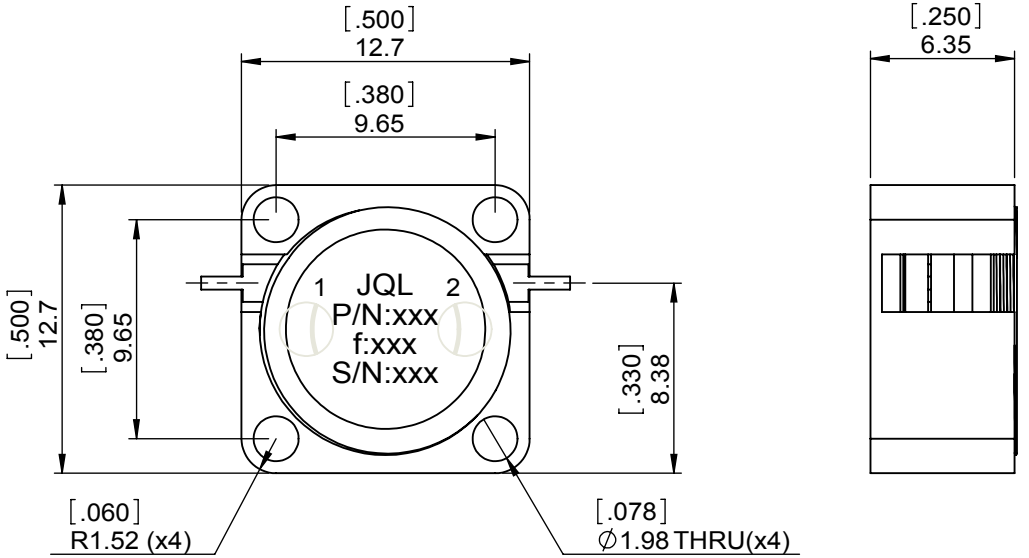

SPECIFICATIONS	
Part's Number	JID10K7T12K8VM0
Frequency(GHz)	10.70~12.80
Direction	CW
Insertion Loss(dB)MAX	0.40
Isolation(dB)MIN	20.0
Return Loss(dB)MIN	20.0
3rd IMD(dBc)MAX	-
Power FWD/REV/PK(Watt)	10/1/-
Operating Temperature(°C)	-40~+85
Storage Temperature(°C)	-
2nd/3rd Harmonic(dBc)	-
Termination/Attenuator(Watt/dB)	-
Tab(W×LG×THK)(mm[Inch])	0.64[0.025]x1.78[0.07]x0.13[0.005]
Additional Notes	-

JQL Electronic Inc
500 Lake Cook Road, Suite 350
Deerfield, IL 60015, USA
Tel: 1(888)236-9828
Fax: 1(888)823-2902

MATERIAL: STEEL

DWG NO: JID10K7T12K8VM0

SURFACE TREATMENT: NICKEL PLATING

DESCRIPTION: DROP-IN ISOLATOR

DWG BY:	LJ.Zhang	03.25.2014	SACLE
CHK'D BY:			3:1
APPV'D BY:			
Unit: mm[inch]	Tolerance: Liner: ±0.25 Anguar: ±0.5°	The First:	A4

RoHS COMPLIANCE

This document is the property of JQL Electronic Inc.
It cannot be copied, duplicated, used for manufacturing purposes or communicated to third party as a whole or partly, without the written consent of JQL Electronic Inc.

WEIGHT:

SHEET 1 OF 1