Document No.	QR4-700-T-003
REV.	A/0

REV.	DESCRIPTION	REVISOR	DATE	APPROVED
0		LJ.Zhang	03.24.2014	David

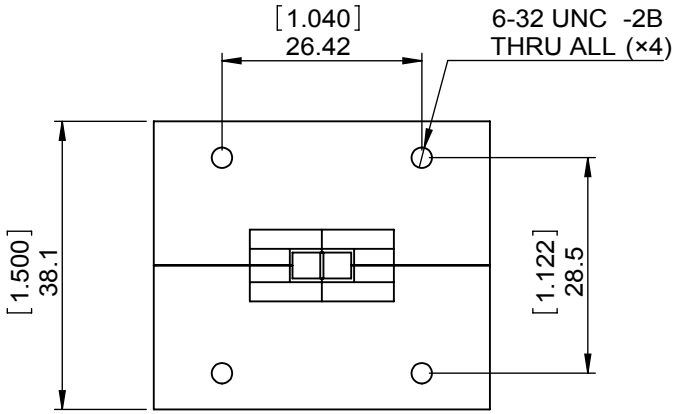

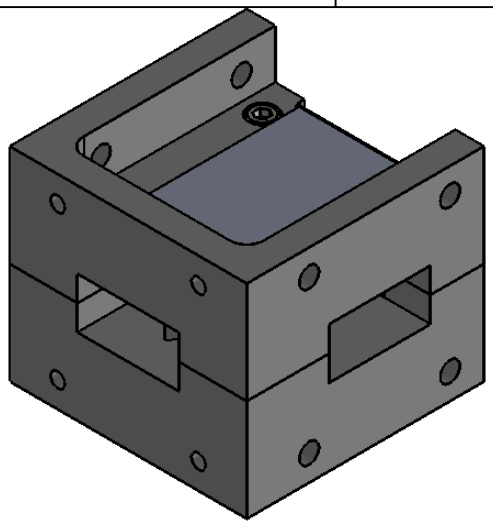

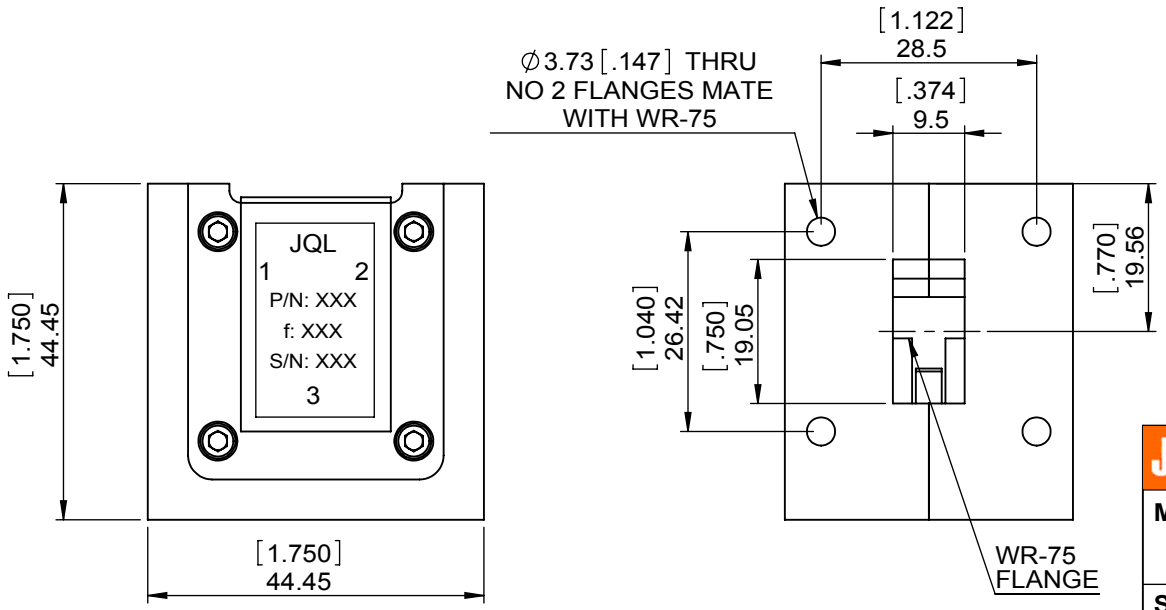

SPECIFICATIONS	
Part's Number	JCWR75-44F-12K0T13K0
Frequency(GHz)	12.00~13.00
Direction	-
Insertion Loss(dB)MAX	0.22
Isolation(dB)MIN	26.0
Return Loss(dB)MIN	26.0
3rd IMD(dBc)MAX	-
Power FWD/REV/PK(Watt)	50/50/-
Operating Temperature(°C)	-40~+85
Storage Temperature(°C)	-
2nd/3rd Harmonic(dBc)	-
Termination/Attenuator(Watt/dB)	-
Tab(W×LG×THK)(mm[Inch])	-
Additional Notes	-

JQL Electronic Inc
500 Lake Cook Road, Suite 350
Deerfield, IL 60015, USA
Tel: 1(888)236-9828
Fax: 1(888)823-2902

MATERIAL: AL

SURFACE TREATMENT: CHEM FILM

DESCRIPTION: WAVEGUIDE

DWG NO: JCWR75-44F-12K0T13K0

DWG BY:	LJ.Zhang	03.24.2014	SACLE
CHK'D BY:			1:1
APPV'D BY:			
Unit: mm[inch]	Tolerance: Liner: ±0.25 Anguar: ±0.5°	The First:	A4

RoHS COMPLIANCE

This document is the property of JQL Electronic Inc.
It cannot be copied, duplicated, used for manufacturing purposes
or communicated to third party as a whole or partly,
without the written consent of JQL Electronic Inc.

WEIGHT:

SHEET 1 OF 1