Document No.	QR4-700-T-003
REV.	A/0

REV.	DESCRIPTION	REVISOR	DATE	APPROVED
0		ZQ.Hou	11.05.2014	David

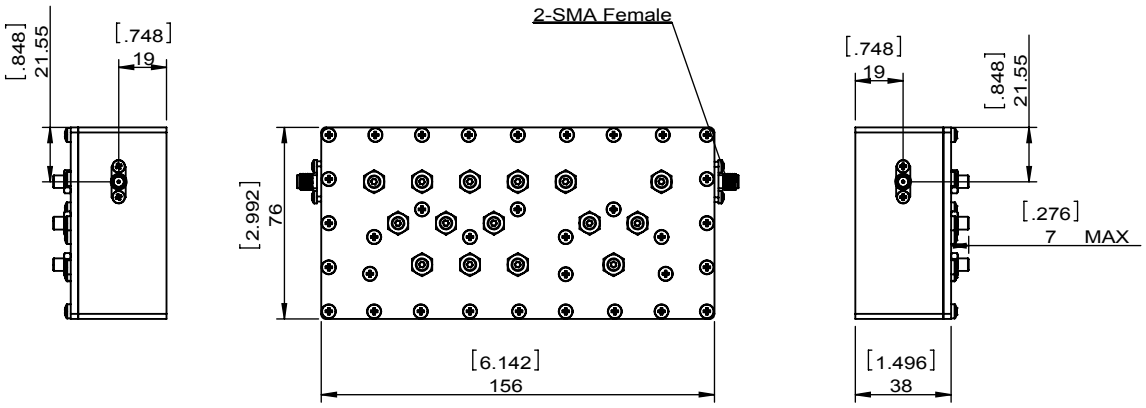

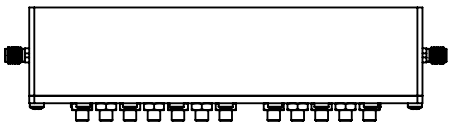

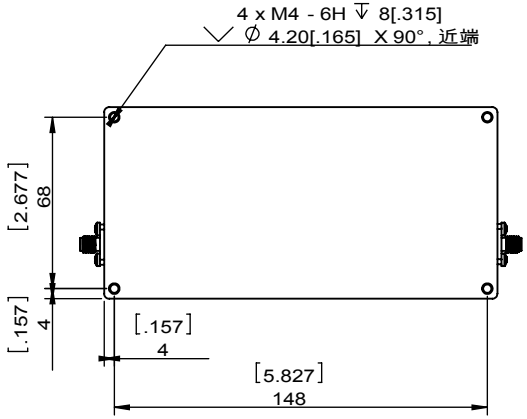

ITEM	SPECIFICATIIONS
Frequency(MHz)	902~928
Insetion Loss(dB)	1.0 Max
Ripple(dB)	0.5 Max
Reject(dBc)	50 Min @ 0-890Mhz 40 Min @ 895Mhz 30 Min @ 932Mhz 50 Min @ 940-2500Mhz
Return Loss(dB)	14Min
Impedance(Ω)	50
Input/Output Power(W)	2 Min CW
Temperature(℃)	-10~+70
Connector	SMA FEMALE
Notes	Mechanical adapter with holes that match for screw pass At diameter 4-40

JQL Electronic Inc

MATERIAL:	**DWG NO:** JFCB0902T0928SF			
SURFACE TREATMENT: PAINTED BLACK	DWG BY:	ZQ.Hou	11.05.2014	SCALE
	CHK'D BY:			1:3
DESCRIPTION: FILTER	APPV'D BY:			
	Unit: mm[inch]	Tolerance: Liner: ±0.25 Anguar: ±0.5°	The First:	A4

RoHS COMPLIANCE

This document is the property of JQL Electronic Inc.
It cannot be copied, duplicated, used for manufacturing purposes or communicated to third party as a whole or partly, without the written consent of JQL Electronic Inc.

WEIGHT:

SHEET 1 OF 1