Stock Number

REV.	DESCRIPTION	REVISOR	DATE	APPROVE
0		MH	02.23.10	CH

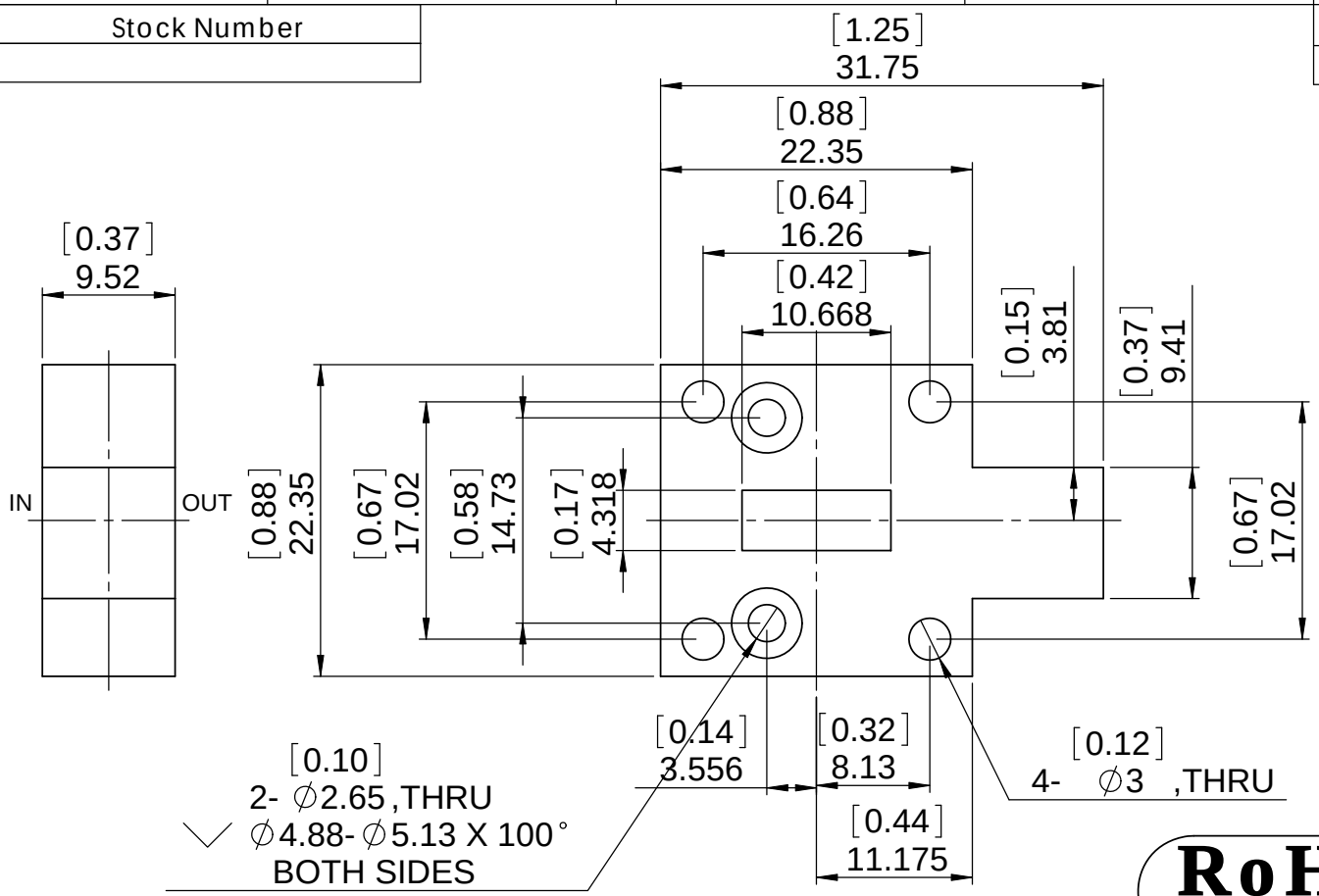

P/N: JIWR42-9.5A-24K5T26K5
FREQ: 24.50~26.50GHz

ISOLATION: 20dB MIN
INS LOSS: 0.4dB MAX
VSWR: 1.25:1 MAX
PWR FWD/REV 1W/1W
TEMP: -30C~+75C
WAVEGUIDE: UBR220

RoHS COMPLIANCE

This document is the property of JQL Electronic Inc.
It cannot be copied, duplicated, used for manufacturing purposes
or communicated to third party as a whole or partly,
without the written consent of JQL Electronic Inc.

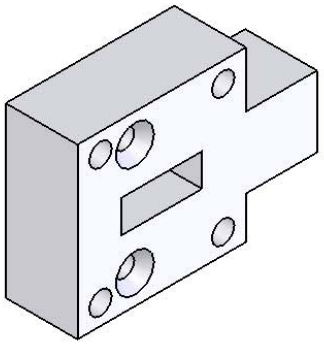

JQL Electronic Inc
500 Lake Cook Road, Suite 350
Deerfield, IL 60015, USA
Tel : 1(888)236-9828
Fax: 1(630)823-2902

MATERIAL:

SURFACE TREATMENT:

DESCRIPTION:
WAVEGUIDE ISO

DWG NO.
JIWR42-9.5A-24K5T26K5

	NAME	DATE	SCALE:
DWG BY:	MH	02.23.10	1:1
CHK'D BY:	SY	02.23.10	
APPV'D BY:	CH	02.23.10	
Unit: mm	TOLERANCE: Liner: ±0.1mm Angular: ±0.5°	Type Of Projection	A4

WEIGHT:

SHEET 1 OF 1