Document No.	QR4-700-T-003
REV.	A/0

REV.	DESCRIPTION	REVISOR	DATE	APPROVED
0		ZC.Wu	05.11.2015	David

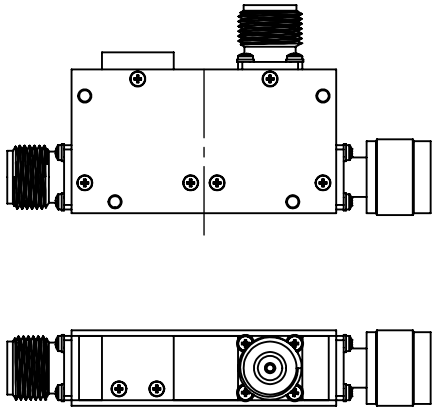

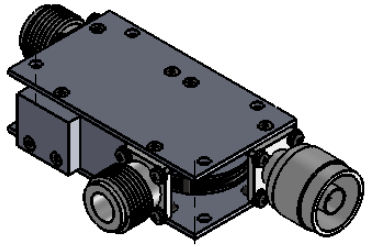

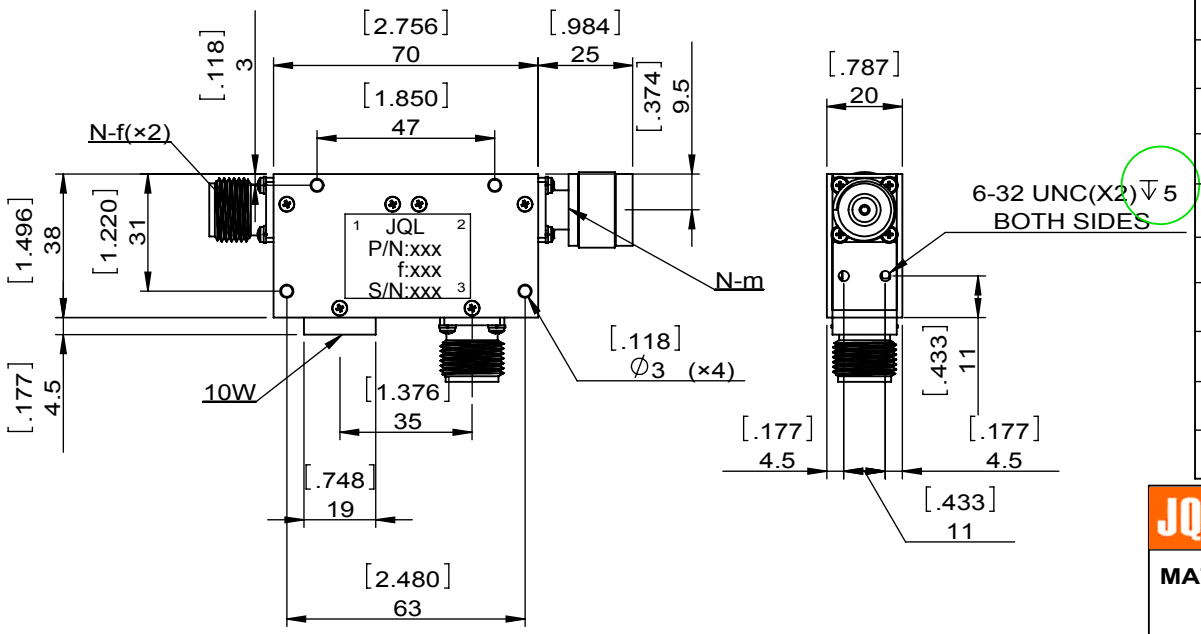

SPECIFICATIONS	
Part's Number	JC2C0760T0780T1NFNMNF20
Frequency(GHz)	0.760~0.780
Direction	-
Insertion Loss(dB)MAX	P1→p2:0.50 P2→p3:0.25
Isolation(dB)MIN	P2→p1:60.0 For dual junction P3→p2:25.0
Return Loss(dB)MIN	25.0
3rd IMD(dBc)MAX	-
Power FWD/REV/PK(Watt)	-/-/-
Operating Temperature(°C)	-30~+75
Storage Temperature(°C)	-
2nd/3rd Harmonic(dBc)	-
Termination/Attenuator(Watt/dB)	10/-
Tab(W×LG×THK)(mm[Inch])	-
Additional Notes	-

JQL Electronic Inc

MATERIAL: STEEL

DWG NO: JC2C0760T0780T1NFNMNF20

SURFACE TREATMENT: NICKEL PLATING

DESCRIPTION: DUAL COAXIAL CIRCULATOR

DWG BY:	ZC.Wu	05.11.2015	SCALE
CHK'D BY:			1:2
APPV'D BY:			
Unit: mm[inch]	Tolerance: Liner: ±0.25 Anguar: ±0.5°	The First:	A4

RoHS COMPLIANCE

This document is the property of JQL Electronic Inc.
It cannot be copied, duplicated, used for manufacturing purposes or communicated to third party as a whole or partly, without the written consent of JQL Electronic Inc.

WEIGHT:

SHEET 1 OF 1