Document No.	QR4-700-T-003
REV.	A/0

REV.	DESCRIPTION	REVISOR	DATE	APPROVED
0		M.Hao	04.07.2013	David

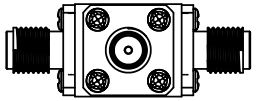

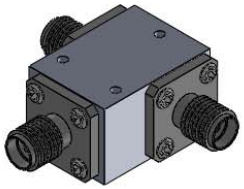

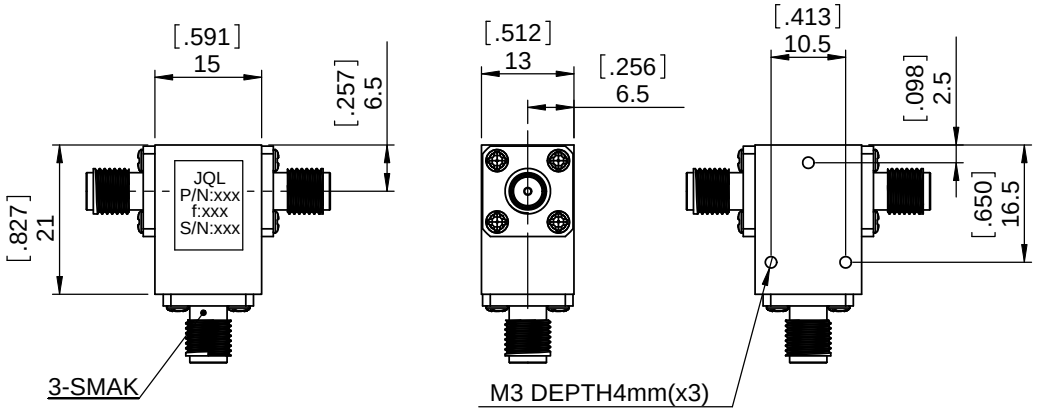

SPECIFICATIONS	
Part's Number	JCC8000T18K0S1
Frequency(GHz)	8.000~18.000
Direction	CW
Insertion Loss(dB)MAX	0.80
Isolation(dB)MIN	16.0
Return Loss(dB)MIN	14.7
3rd IMD(dBc)MAX	-
Power FWD/REV/PK(Watt)	-10/10/-
Operating Temperature(°C)	-30~70
Storage Temperature(°C)	-
2nd/3rd Harmonic(dBc)	-
Termination/Attenuator(Watt/dB)	-
Tab(W×LG×THK)(mm[Inch])	-
Additional Notes	-

JQL Electronic Inc

MATERIAL: STEEL

DWG NO:

SURFACE TREATMENT: NICKEL PLATING

DESCRIPTION: COAX CIRCULATOR

DWG BY:	M.Hao	04.07.2013	SACLE
CHK'D BY:			1:1
APPV'D BY:			
Unit: mm[inch]	Tolerance: Liner: ±0.25 Anguar: ±0.5°	The First:	A4

RoHS COMPLIANCE

This document is the property of JQL Electronic Inc.
It cannot be copied, duplicated, used for manufacturing purposes or communicated to third party as a whole or partly, without the written consent of JQL Electronic Inc.

WEIGHT:

SHEET 1 OF 1