Document No.	QR4-700-T-003
REV.	A/0

REV.	DESCRIPTION	REVISOR	DATE	APPROVED
0		LJ.Zhang	04.16.2014	David

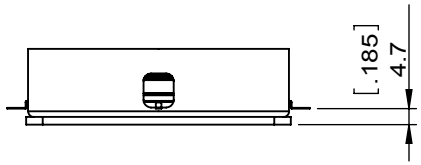

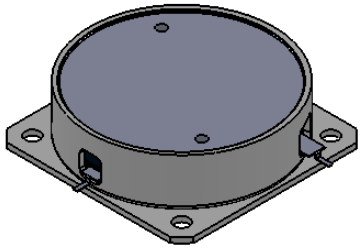

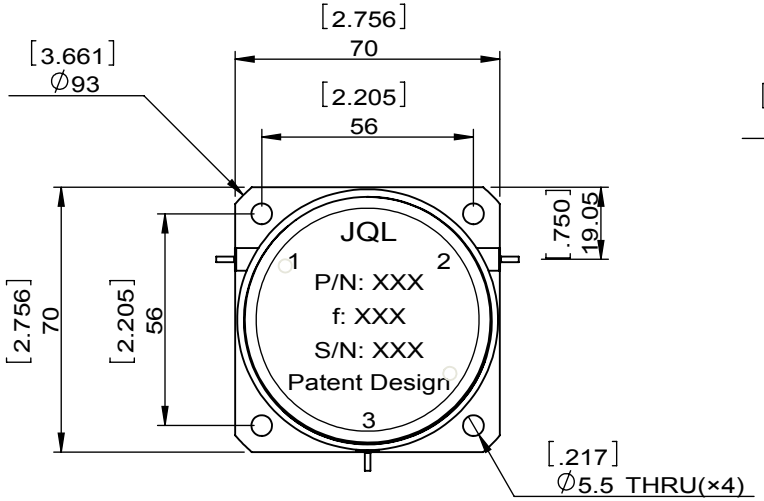

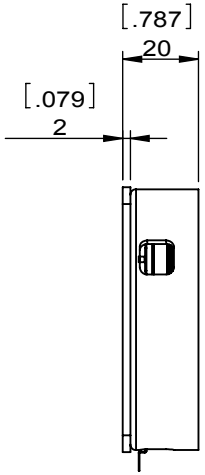

SPECIFICATIONS	
Part's Number	JCD0180T0225EM5
Frequency(GHz)	0.180~0.225
Direction	CW
Insertion Loss(dB)MAX	0.80
Isolation(dB)MIN	18.0
Return Loss(dB)MIN	17.0
3rd IMD(dBc)MAX	-
Power FWD/REV/PK(Watt)	50/50/500
Operating Temperature(°C)	0~+70
Storage Temperature(°C)	0~+85
2nd/3rd Harmonic(dBc)	-
Termination/Attenuator(Watt/dB)	-
Tab(W×LG×THK)(mm[Inch])	1.5[.059]×5.0[.196]×0.25[.010]
Additional Notes	-

NOTES:
1.STANDARD INPUT/OUTPUT 50OHM IMPEDANCE
2.BEO FREE,LEAD FREE,NO Nd MATERIAL
3.RoHS COMPLIANT
4.S-PARAMETERS TO BE MEASURED BY CONECTING PORT 1 AND PORT 2 TO VNA, PORT 3 TO LOAD
5.LOAD RETURN LOSS IS 30dB OR HIGHER WHEN TUNING

RoHS COMPLIANCE

This document is the property of JQL Electronic Inc.
It cannot be copied, duplicated, used for manufacturing purposes or communicated to third party as a whole or partly, without the written consent of JQL Electronic Inc.

JQL Electronic Inc
3501 Algonquin Road, Ste 230
Rolling Meadows, IL 60008
1(888) 236-9828
(630) 823-2902

MATERIAL: STEEL	DWG NO: JCD0180T0225EM5			
SURFACE TREATMENT: NICKEL PLATING	DWG BY:	LJ.Zhang	04.16.2014	SACLE
	CHK'D BY:			1:2
DESCRIPTION: DROP-IN CIRCULATOR	APPV'D BY:			
	Unit: mm[inch]	Tolerance: Liner: ±0.25 Anguar: ±0.5°	The First:	A4

WEIGHT:

SHEET 1 OF 1