Document No.	QR4-700-T-003
REV.	A/0

REV.	DESCRIPTION	REVISOR	DATE	APPROVED
0		X.S	11.05.2021	HC.Qiu

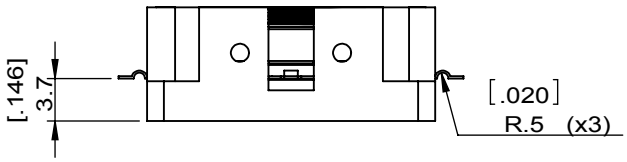

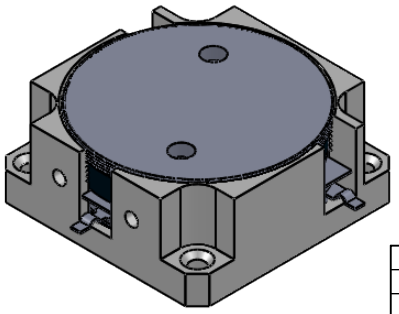

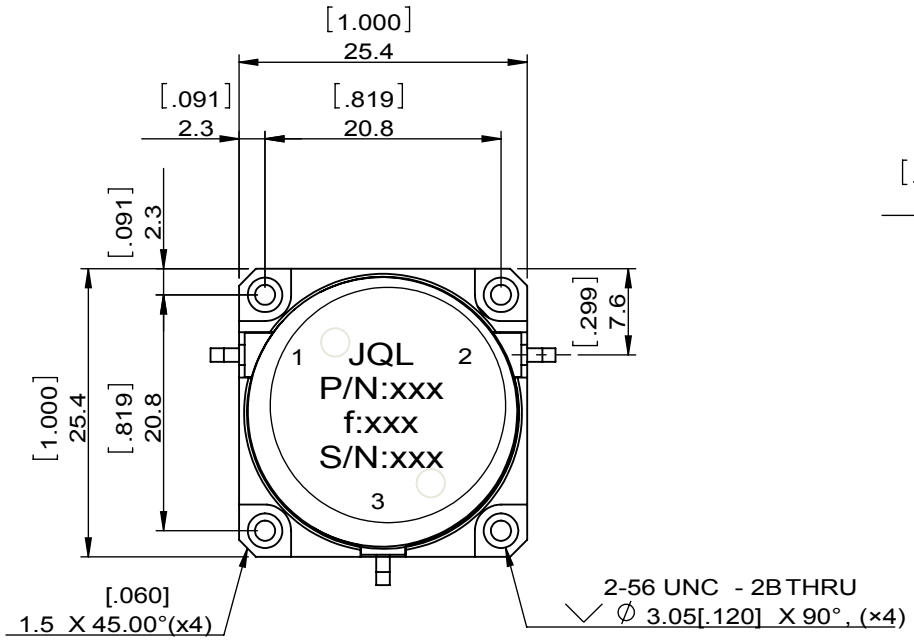

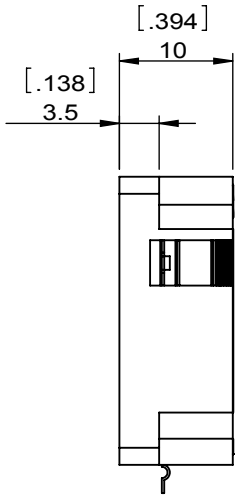

SPECIFICATIONS	
Part's Number	JCD0950T1300M25
Frequency(GHz)	0.950~1.300
Direction	CW
Insertion Loss(dB)MAX	0.50
Isolation(dB)MIN	16.0
Return Loss(dB)MIN	15.5
3rd IMD(dBc)MAX	-
Power FWD/REV/PK(Watt)	50/50/500
Operating Temperature(°C)	-40~+85
Storage Temperature(°C)	-55~+125
2nd/3rd Harmonic(dBc)	-
Termination/Attenuator(Watt/dB)	-
Tab(W×LG×THK)(mm[Inch])	1.2[.047]x2.5[.100]x0.2[0.008]
Additional Notes	Note: 1.INSERTION PHASE MATCH +/-3 DEGREE AMONG PORTS 1-2,2-3,3-1 2.PHASE MATCH +/-5 DEGREE AMONG PARTS 3.All ports are filled with RTV 4.OMEGE AT TABS 5.SILVER PLATING REMOVAL OF TAB EDGES 6.BARE TAB EDGES WITH TIN LEAD SOLDER DIPPED 7.C-X

NOTES:
1.STANDARD INPUT/OUTPUT 50OHM IMPEDANCE
2.BEO FREE,LEAD FREE,NO Nd MATERIAL
3.RoHS COMPLIANT
4.S-PARAMETERS TO BE MEASURED BY CONECTING PORT 1 AND PORT 2 TO VNA, PORT 3 TO LOAD
5.LOAD RETURN LOSS IS 30dB OR HIGHER WHEN TUNING

RoHS COMPLIANCE

This document is the property of JQL Electronic Inc.
It cannot be copied, duplicated, used for manufacturing purposes or communicated to third party as a whole or partly, without the written consent of JQL Electronic Inc.

JQL Electronic Inc

MATERIAL: STEEL	**DWG NO:** JCD0950T1300M25			
SURFACE TREATMENT: NICKEL PLATING	DWG BY:	x.s	11.05.2021	SACLE
	CHK'D BY:			3:2
DESCRIPTION: DROP-IN CIRCULATOR	APPV'D BY:			
	Unit: mm[inch]	Tolerance: Liner: ±0.25 Anguar: ±0.5°	The First:	A4

WEIGHT:

SHEET 1 OF 1