Document No.	QR4-700-T-003
REV.	A/0

REV.	DESCRIPTION	REVISOR	DATE	APPROVED
0		ZC.Wu	08.27.2014	David

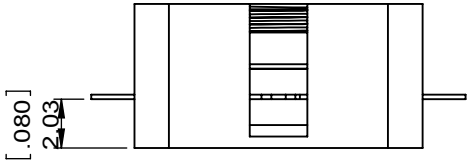

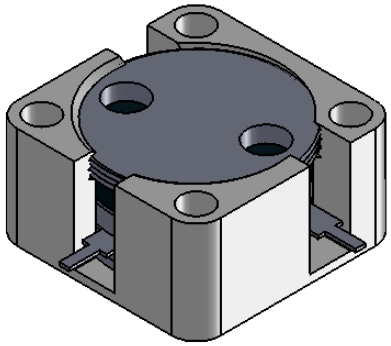

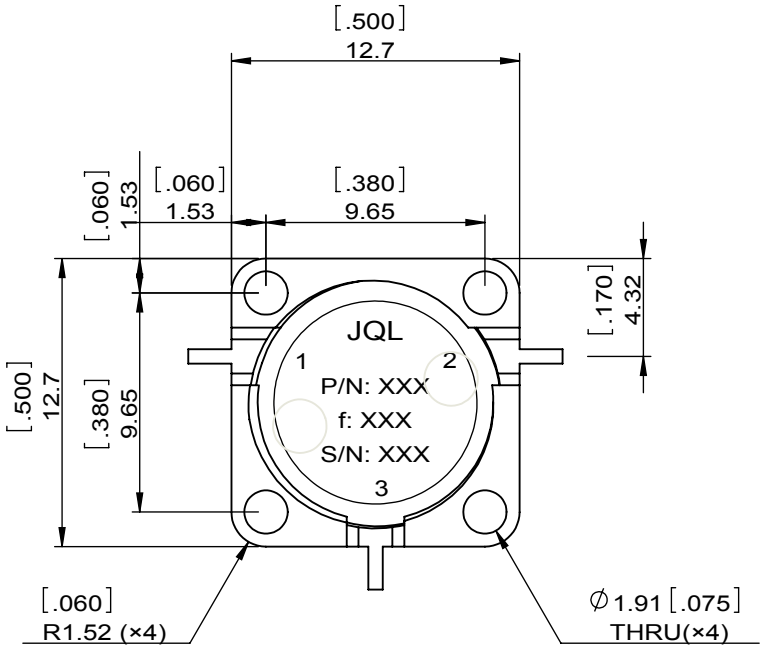

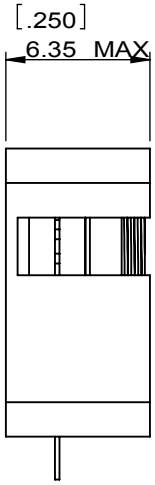

SPECIFICATIONS	
Part's Number	JCD4400T5000VM2
Frequency(GHz)	4.400~5.000
Direction	CW
Insertion Loss(dB)MAX	0.4
Isolation(dB)MIN	20.0
Return Loss(dB)MIN	19.0
3rd IMD(dBc)MAX	-
Power FWD/REV/PK(Watt)	25/25/-
Operating Temperature(°C)	-40~+85
Storage Temperature(°C)	-
2nd/3rd Harmonic(dBc)	-
Termination/Attenuator(Watt/dB)	-
Tab(W×LG×THK)(mm[Inch])	.635[.03]×2.0[.078]×.20[.008]
Additional Notes	-

NOTES:
1.STANDARD INPUT/OUTPUT 50OHM IMPEDANCE
2.BEO FREE,LEAD FREE,NO Nd MATERIAL
3.RoHS COMPLIANT
4.S-PARAMETERS TO BE MEASURED BYCONECTING PORT 1 AND PORT 2 TO VNA,PORT 3 TO LOAD
5.LOAD RETURN LOSS IS 30dB OR HIGHER WHEN TUNING

RoHS COMPLIANCE

This document is the property of JQL Electronic Inc.
It cannot be copied, duplicated, used for manufacturing purposes or communicated to third party as a whole or partly, without the written consent of JQL Electronic Inc.

JQL Electronic Inc

MATERIAL: STEEL	**DWG NO:** JCD4400T5000VM2			
SURFACE TREATMENT: NICKEL PLATING	DWG BY:	ZC.Wu	08.27.2014	SCALE
	CHK'D BY:			3:1
DESCRIPTION: DROP-IN CIRCULATOR	APPV'D BY:			
	Unit: mm[inch]	Tolerance: Liner: ±0.25 Anguar: ±0.5°	The First:	A4