Document No.	QR4-700-T-003
REV.	A/0

REV.	DESCRIPTION	REVISOR	DATE	APPROVED
0		M.Hao	01.17.2014	David

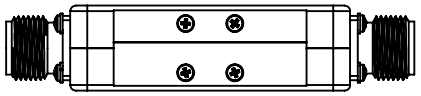

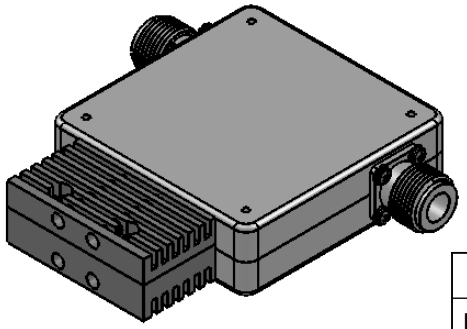

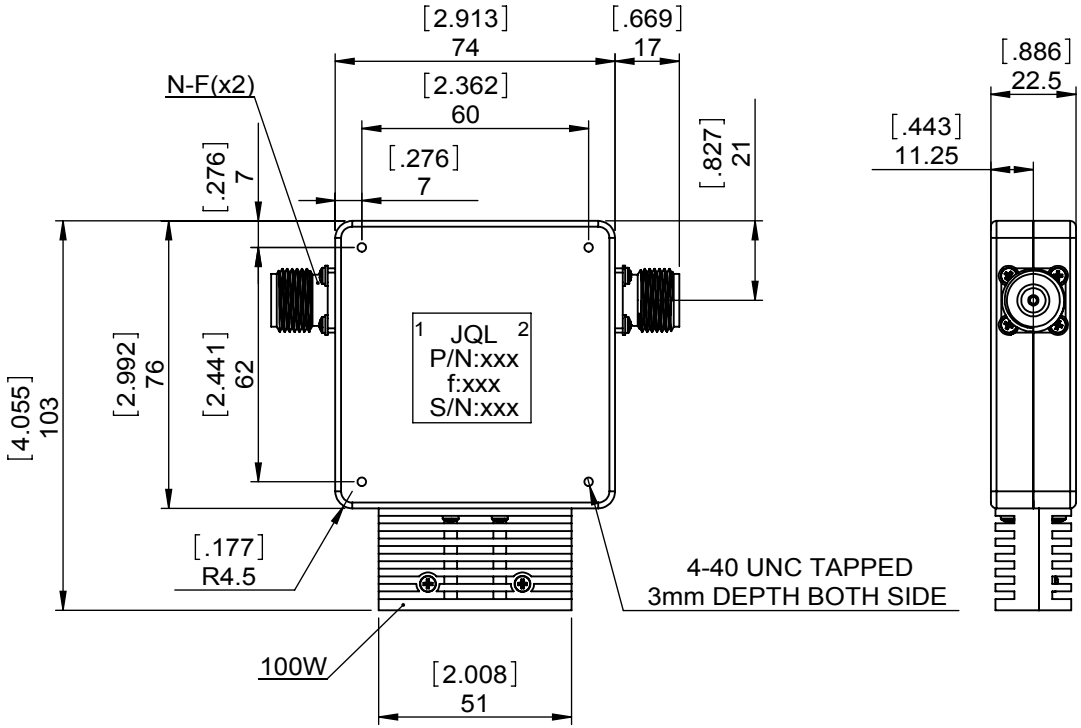

SPECIFICATIONS	
Part's Number	JIC0123N3
Frequency(GHz)	0.123~0.124
Direction	-
Insertion Loss(dB)MAX	0.50
Isolation(dB)MIN	19.0
Return Loss(dB)MIN	19.0
3rd IMD(dBc)MAX	-
Power FWD/REV/PK(Watt)	100/30/-
Operating Temperature(°C)	0~+60
Storage Temperature(°C)	-
2nd/3rd Harmonic(dBc)	-
Termination/Attenuator(Watt/dB)	100
Tab(W×LG×THK)(mm[Inch])	-
Additional Notes	-

JQL Electronic Inc

MATERIAL: STEEL

SURFACE TREATMENT: NICKEL PLATING

DESCRIPTION: COAX ISOLATOR

DWG NO JIC0123N3

DWG BY:	M.Hao	01.17.2014	SACLE
CHK'D BY:			1:2
APPV'D BY:			
Unit: mm[inch]	Tolerance: Liner: ±0.25 Anguar: ±0.5°	The First:	A4

RoHS COMPLIANCE

This document is the property of JQL Electronic Inc.
It cannot be copied, duplicated, used for manufacturing purposes
or communicated to third party as a whole or partly,
without the written consent of JQL Electronic Inc.

WEIGHT:

SHEET 1 OF 1