Document No.	QR4-700-T-003
REV.	A/0

REV.	DESCRIPTION	REVISOR	DATE	APPROVED
0		LJ.Zhang	09.11.2013	David

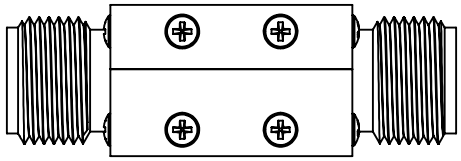

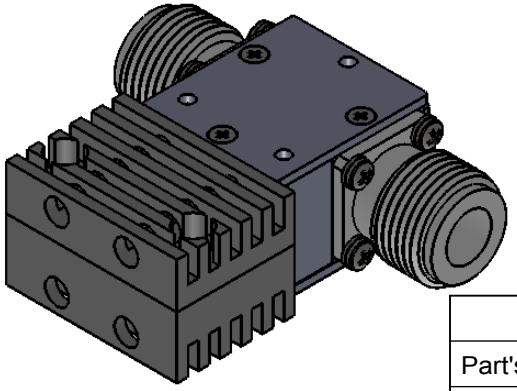

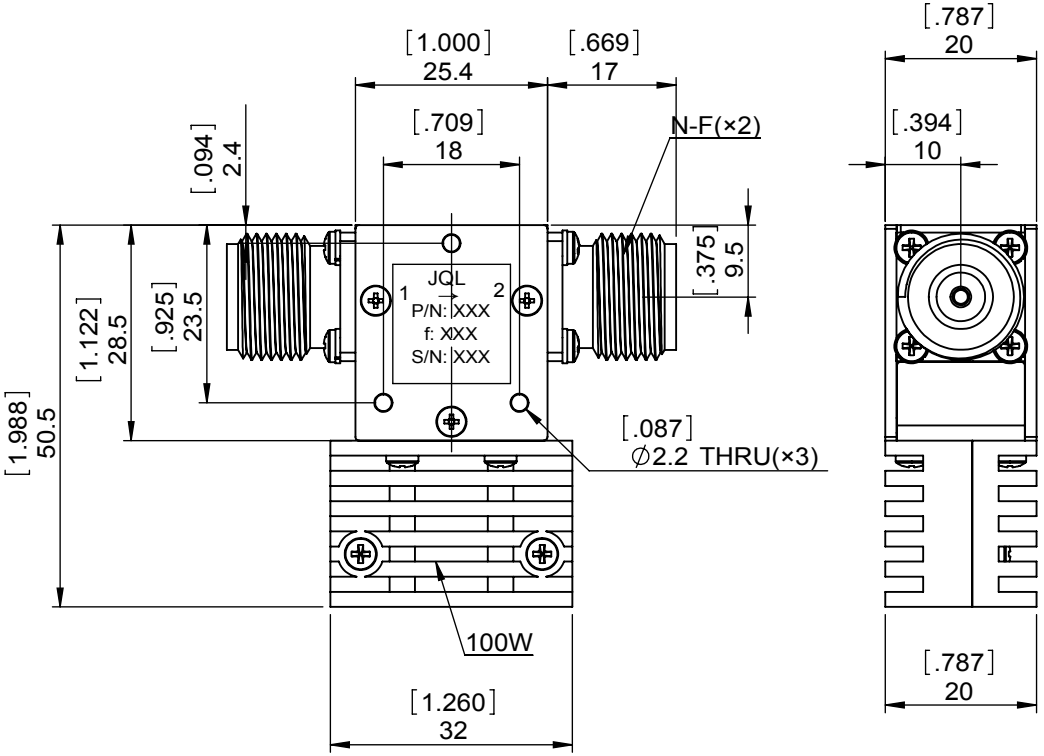

SPECIFICATIONS	
Part's Number	JIC2200T2700N5
Frequency(GHz)	2.200~2.700
Direction	-
Insertion Loss(dB)MAX	0.30
Isolation(dB)MIN	23.0
Return Loss(dB)MIN	22.0
3rd IMD(dBc)MAX	-
Power FWD/REV/PK(Watt)	50/50/-
Operating Temperature(°C)	-10~+65
Storage Temperature(°C)	
2nd/3rd Harmonic(dBc)	-
Termination/Attenuator(Watt/dB)	100
Tab(W×LG×THK)(mm[Inch])	-
Additional Notes	-

JQL Electronic Inc

MATERIAL: STEEL

DWG NO: JIC2200T2700N5

SURFACE TREATMENT: NICKEL PLATING

DESCRIPTION: COAXIAL ISOLATOR

DWG BY:	LJ.Zhang	09.11.2013	SACLE
CHK'D BY:			1:1
APPV'D BY:			
Unit: mm[inch]	Tolerance: Liner: ±0.25 Anguar: ±0.5°	The First:	A4

RoHS COMPLIANCE

This document is the property of JQL Electronic Inc.
It cannot be copied, duplicated, used for manufacturing purposes or communicated to third party as a whole or partly, without the written consent of JQL Electronic Inc.

WEIGHT:

SHEET 1 OF 1