REV.	DESCRIPTION	REVISOR	DATE	APPROVE

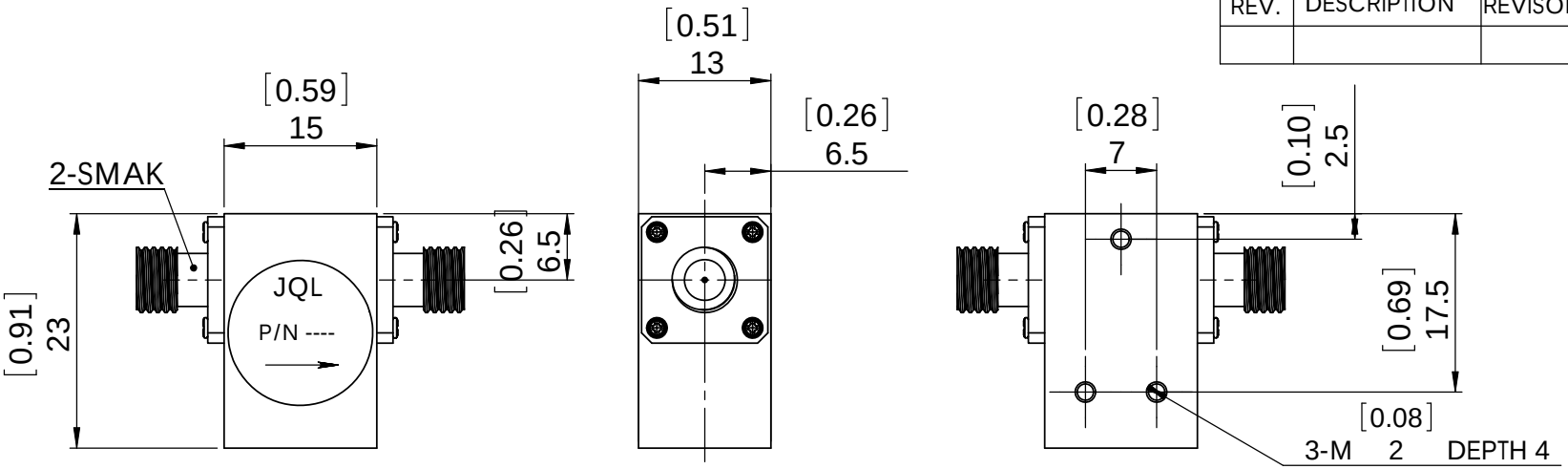

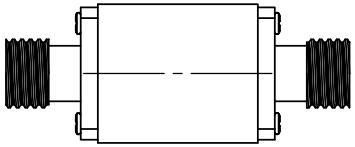

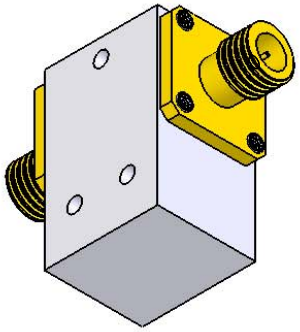

SPECIFICATIONS

P/N:	JIC8000T16K0S1
FREQUENCY:	8~16GHz
CIRCULATION:	CW
ISOLATION:	17dB MIN
INS LOSS:	0.8dB MAX
VSWR:	1.40:1 MAX
PWR FWD/REV	30W/10W
TEMP:	-40C~+75C

This document is the property of JQL Electronic Inc.
It cannot be copied, duplicated, used for manufacturing purposes
or communicated to third party as a whole or partly,
without the written consent of JQL Electronic Inc.

JQL Electronic Inc

MATERIAL:

SURFACE TREATMENT:

DESCRIPTION:
COAX ISOLATOR

DWG NO.
JIC8000T16K0S1

	NAME	DATE	SIGNTURE
DWG BY:			
CHK'D BY:			
APPV'D BY			

TOLERANCE
Liner: ±0.1mm
Angular: ±0.5°

Q.A

REV: 0

A4

WEIGHT:

SCALE:1:1

SHEET 1 OF 1