Document No.	QR4-700-T-003
REV.	A/0

REV.	DESCRIPTION	REVISOR	DATE	APPROVED
0		ZC.Wu	08.20.2014	David

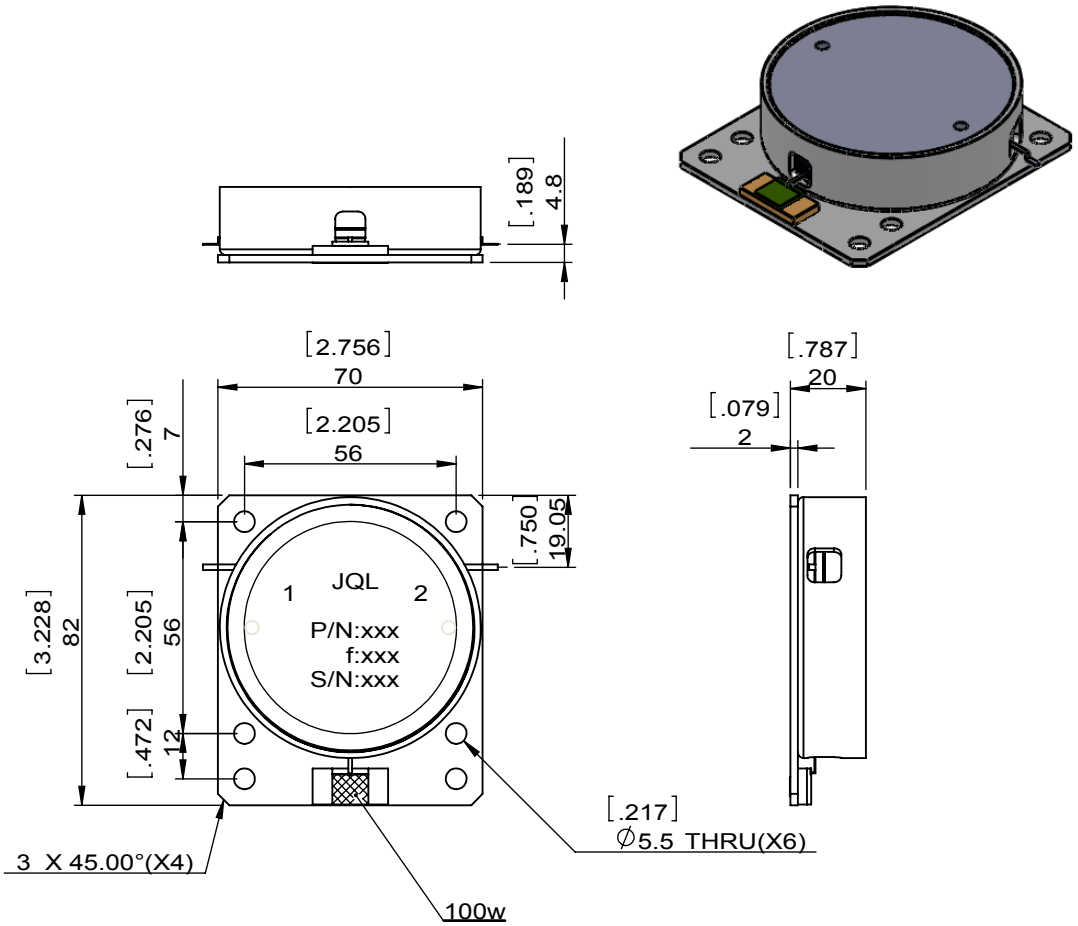

SPECIFICATIONS	
Part's Number	JID0156T0174EM10
Frequency(GHz)	0.156~0.174
Direction	CW
Insertion Loss(dB)MAX	0.5
Isolation(dB)MIN	18
Return Loss(dB)MIN	18
3rd IMD(dBc)MAX	
Power FWD/REV/PK(Watt)	100/100/-
Operating Temperature(°C)	-20~60
Storage Temperature(°C)	
2nd/3rd Harmonic(dBc)	-
Termination/Attenuator(Watt/dB)	100W
Tab(W×LG×THK)(mm[Inch])	1.5[0.060]X4.0[0.157]X0.25[0.010]
Additional Notes	-

JQL Electronic Inc
3501 Algonquin Road, Ste 230
Rolling Meadows, IL 60008
1(888) 236-9828
(630) 823-2902

MATERIAL:
I7082-001

SURFACE TREATMENT:
NICKEL PLATING

DESCRIPTION:
DROP IN ISOLATOR

DWG NO:
JID0156T0174EM10

DWG BY:	ZC.Wu	08.20..2014	SCALE
CHK'D BY:			1:2
APPV'D BY:			
Unit: mm[inch]	Tolerance: Liner: ±0.25 Anguar: ±0.5°	The First:	A4

RoHS COMPLIANCE

This document is the property of JQL Electronic Inc.
It cannot be copied, duplicated, used for manufacturing purposes or communicated to third party as a whole or partly, without the written consent of JQL Electronic Inc.

WEIGHT:

SHEET 1 OF 1