Document No.	QR4-700-T-003
REV.	A/0

REV.	DESCRIPTION	REVISOR	DATE	APPROVED
0		ZC.Wu	05.28.2014	David

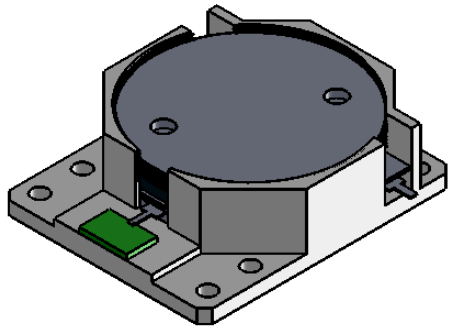

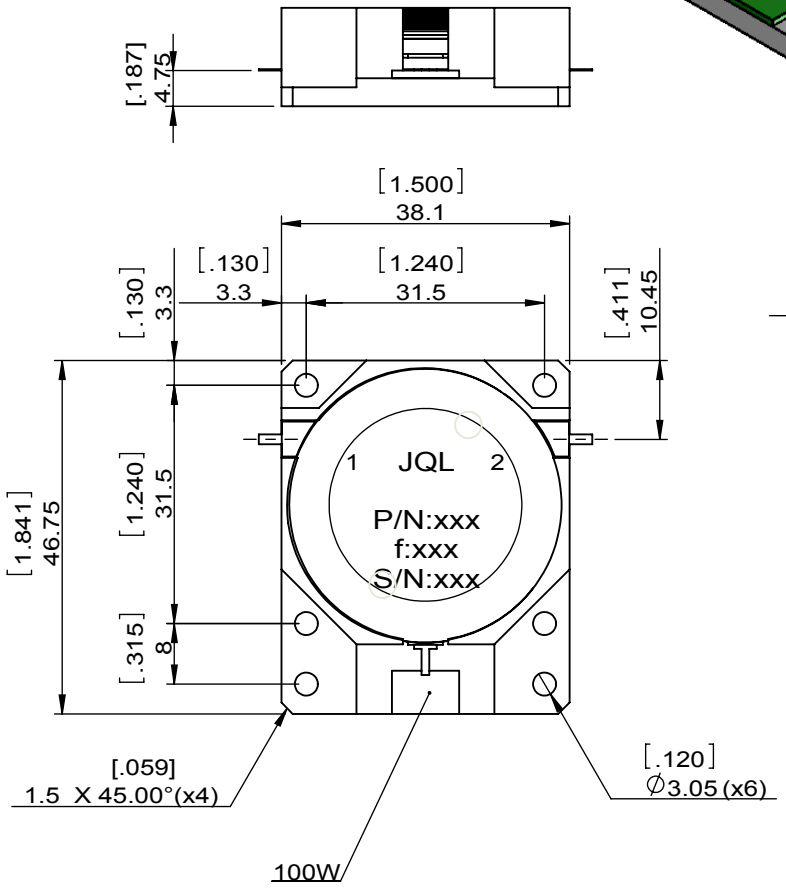

SPECIFICATIONS	
Part's Number	JID0542T0686KM3
Frequency(GHz)	0.542~0.686
Direction	CW
Insertion Loss(dB)MAX	0.50
Isolation(dB)MIN	20.0
Return Loss(dB)MIN	20.0
3rd IMD(dBc)MAX	
Power FWD/REV/PK(Watt)	30/30/300
Operating Temperature(°C)	-20~+80
Storage Temperature(°C)	-
2nd/3rd Harmonic(dBc)	-
Termination/Attenuator(Watt/dB)	100/-
Tab(W×LG×THK)(mm[Inch])	1.30[0.051]x3[0.118]x0.2[0.008]
Additional Notes	

JQL Electronic Inc

MATERIAL: STEEL	**DWG NO:** JID0542T0686KM3			
SURFACE TREATMENT: NICKEL PLATING	DWG BY:	ZC.Wu	05.28.2014	SACLE
	CHK'D BY:			1:1
DESCRIPTION: DROP IN ISOLATORT	APPV'D BY:			
	Unit: mm[inch]	Tolerance: Liner: ±0.25 Anguar: ±0.5°	The First:	A4

RoHS COMPLIANCE

This document is the property of JQL Electronic Inc.
It cannot be copied, duplicated, used for manufacturing purposes
or communicated to third party as a whole or partly,
without the written consent of JQL Electronic Inc.

WEIGHT:

SHEET 1 OF 1