Document No.	QR4-700-T-003
REV.	A/0

REV.	DESCRIPTION	REVISOR	DATE	APPROVED
0		LJ.Zhang	07.09.2015	David

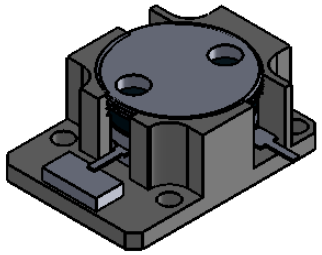

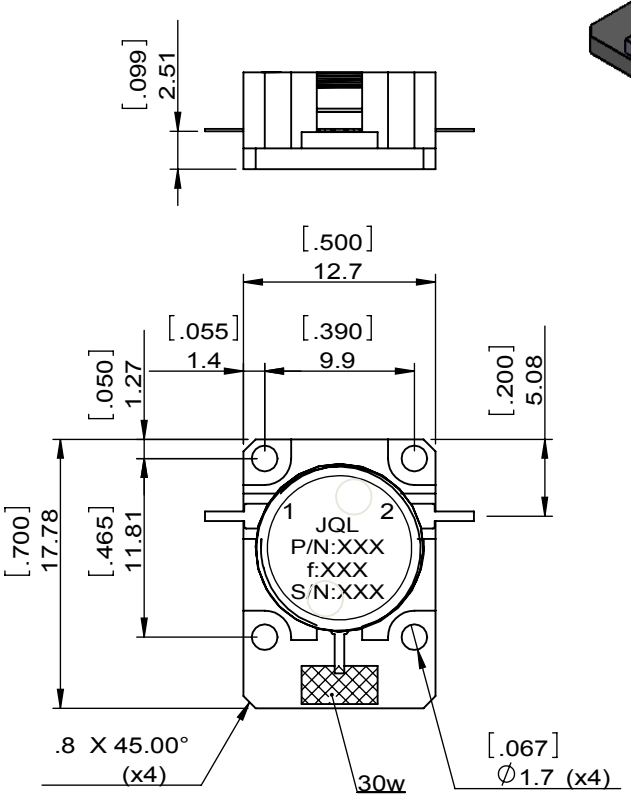

SPECIFICATIONS	
Part's Number	JID13K7T14K5VM2
Frequency(GHz)	13.70~14.50
Direction	CW
Insertion Loss(dB)MAX	0.50
Isolation(dB)MIN	20.0
Return Loss(dB)MIN	19.0
3rd IMD(dBc)MAX	-
Power FWD/REV/PK(Watt)	20/15/-
Operating Temperature(°C)	-40~+85
Storage Temperature(°C)	-
2nd/3rd Harmonic(dBc)	-
Termination/Attenuator(Watt/dB)	30/-
Tab(W×LG×THK)(mm[Inch])	0.635[.030]X2.0[.078]X0.15[.010]
Additional Notes	

JQL Electronic Inc

MATERIAL: STEEL	**DWG NO:** JID13K7T14K5VM2			
SURFACE TREATMENT: NICKEL PLATING	DWG BY:	LJ.Zhang	07.09.2015	SCALE
	CHK'D BY:			2:1
DESCRIPTION: DROP-IN ISOLATOR	APPV'D BY:			
	Unit: mm[inch]	Tolerance: Liner: ±0.25 Anguar: ±0.5°	The First:	A4

RoHS COMPLIANCE

This document is the property of JQL Electronic Inc.
It cannot be copied, duplicated, used for manufacturing purposes or communicated to third party as a whole or partly, without the written consent of JQL Electronic Inc.

WEIGHT:

SHEET 1 OF 1