Document No.	QR4-700-T-003
REV.	A/0

REV.	DESCRIPTION	REVISOR	DATE	APPROVED
0		ZC.Wu	04.13.2015	David

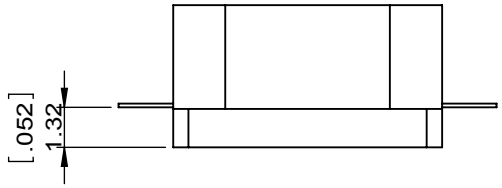

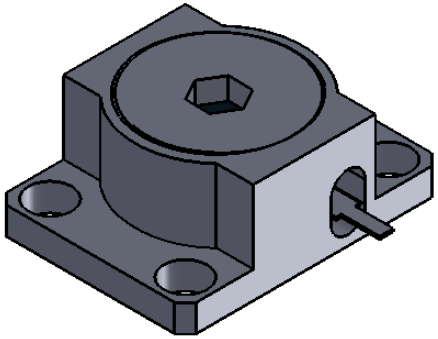

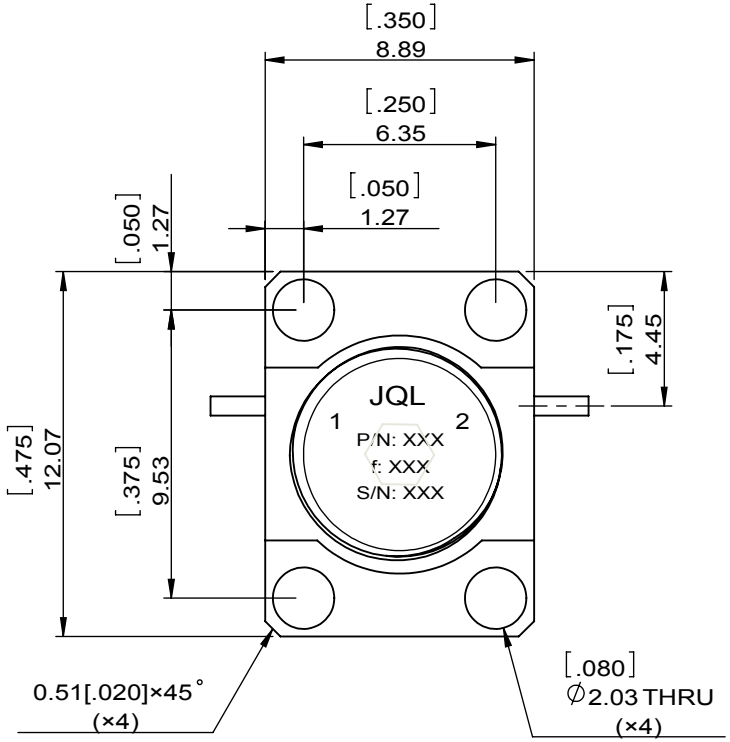

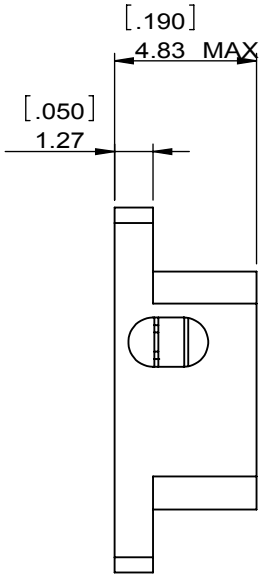

SPECIFICATIONS	
Part's Number	JID15K0T17K0CM1
Frequency(GHz)	15.00~17.00
Direction	CW
Insertion Loss(dB)MAX	0.6
Isolation(dB)MIN	20.0
Return Loss(dB)MIN	18.0
3rd IMD(dBc)MAX	-
Power FWD/REV/PK(Watt)	1/0.5/-
Operating Temperature(°C)	-40~+85
Storage Temperature(°C)	--
2nd/3rd Harmonic(dBc)	-
Termination/Attenuator(Watt/dB)	-
Tab(W×LG×THK)(mm[Inch])	0.635[.025]×1.78[.07]×0.13[.005]-
Additional Notes	-

JQL Electronic Inc

MATERIAL: STEEL

SURFACE TREATMENT: NICKEL PLATING

DESCRIPTION: DROP-IN ISOLATOR

DWG NO: JID15K0T17K0CM1

DWG BY:	ZC.Wu	04.13.2015	SCALE
CHK'D BY:			4:1
APPV'D BY:			
Unit: mm[inch]	Tolerance: Liner: ±0.25 Anguar: ±0.5°	The First:	A4

RoHS COMPLIANCE

This document is the property of JQL Electronic Inc.
It cannot be copied, duplicated, used for manufacturing purposes or communicated to third party as a whole or partly, without the written consent of JQL Electronic Inc.

WEIGHT:

SHEET 1 OF 1