REV.	DESCRIPTION	REVISOR	DATE	APPROVE

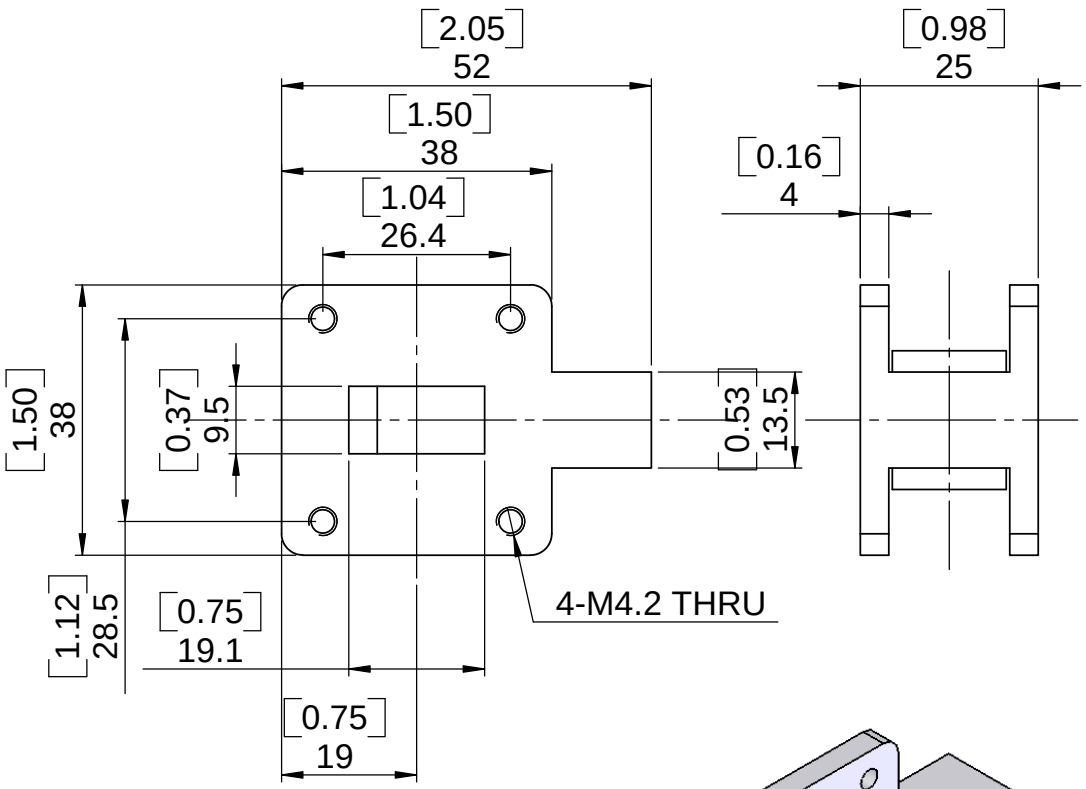

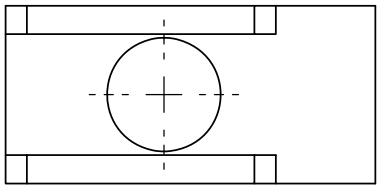

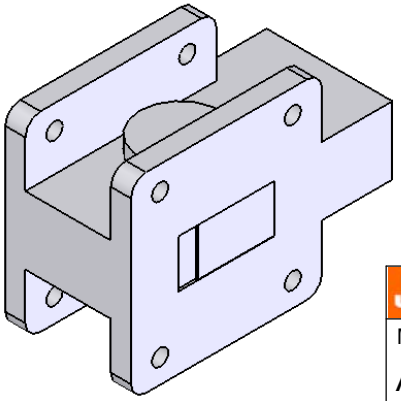

SPECIFICATIONS

P/N: JIWR-WR75-10K0T10K7
FREQ: 10.0~10.7GHz

ISOLATION: 23dB MIN
INS LOSS: 0.3dB MAX
VSWR: 1.20:1 MAX
PWR FWD/REV 15W/10W
WAVEGUIDE: WR75
TEMP: -30~70C

This document is the property of JQL Electronic Inc.
It cannot be copied, duplicated, used for manufacturing purposes
or communicated to third party as a whole or partly,
without the written consent of JQL Electronic Inc.

JQL Electronic Inc
500 Lake Cook Road, Suite 350
Deerfield, IL 60015, USA
Tel : 1(888)236-9828
Fax: 1(630)823-2902

MATERIAL: ALUMINUM

SURFACE TREATMENT:

DESCRIPTION: WAVEGUIDE

DWG NO. JIWR-WR75-10K0T10K7

	NAME	DATE	SIGNTURE
DWG BY:	SY	01.13.09	
CHK'D BY:	GC	01.13.09	
APPV'D BY	JZ	01.13.09	

TOLERANCE
Liner: ±0.1mm
Angular: ±0.5°

Q.A

REV: 0

A4

WEIGHT:

SCALE:1:1

SHEET 1 OF 1