Document No.	QR4-700-T-003
REV.	A/0

REV.	DESCRIPTION	REVISOR	DATE	APPROVED
0		ZC.Wu	11.10.2015	David

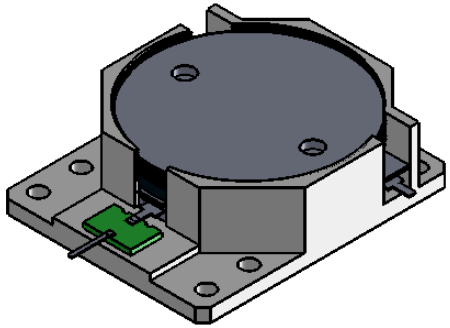

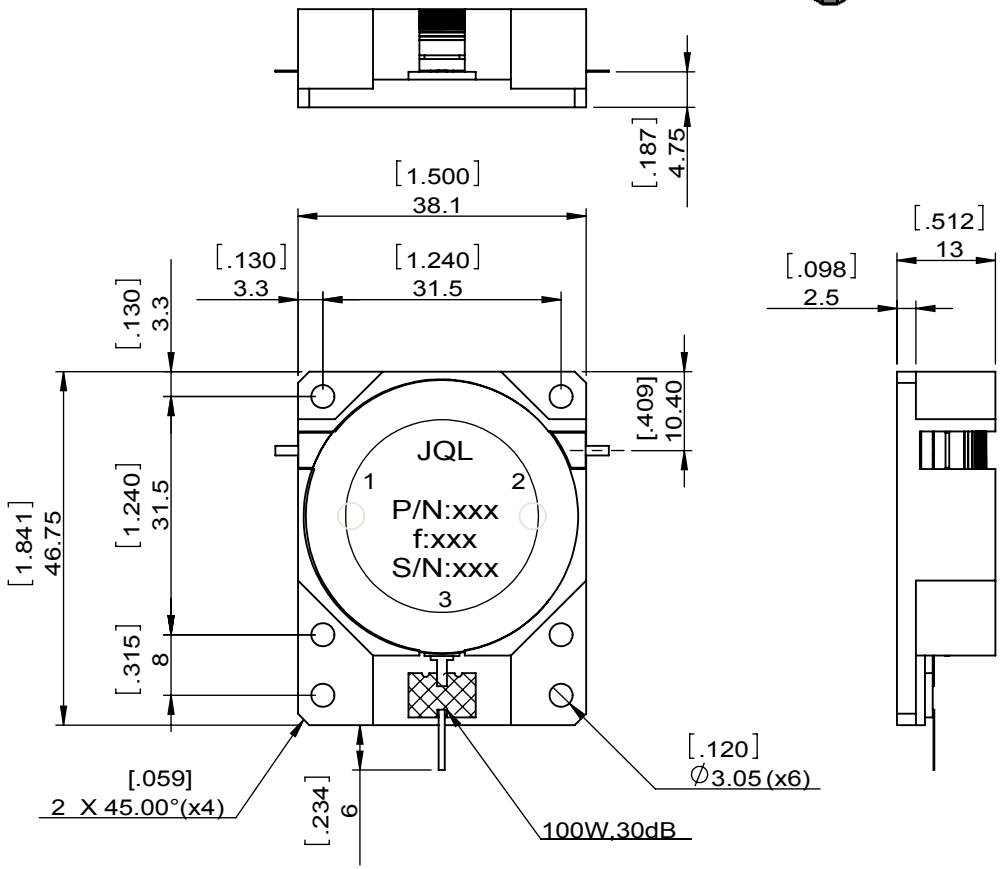

SPECIFICATIONS	
Part's Number	JID0420T0490KM10A3
Frequency(GHz)	0.420~0.490
Direction	CW
Insertion Loss(dB)MAX	0.4
Isolation(dB)MIN	20.0
Return Loss(dB)MIN	19.0
3rd IMD(dBc)MAX	-
Power FWD/REV/PK(Watt)	150/100/-
Operating Temperature(°C)	-20~+85
Storage Temperature(°C)	-
2nd/3rd Harmonic(dBc)	-
Termination/Attenuator(Watt/dB)	100/30
Tab(W×LG×THK)(mm[Inch])	1.30[0.051]x3[0.118]x0.2[0.008]
Additional Notes	-

JQL Electronic Inc

MATERIAL: STEEL	**DWG NO:** JID0420T0490KM10A3			
SURFACE TREATMENT: NICKEL PLATING	DWG BY:	ZC.Wu	11.10.2015	SCALE
	CHK'D BY:			1:1
DESCRIPTION: DROP-IN ISOLATOR	APPV'D BY:			
	Unit: mm[inch]	Tolerance: Liner: ±0.25 Anguar: ±0.5°	The First:	A4

RoHS COMPLIANCE

This document is the property of JQL Electronic Inc.
It cannot be copied, duplicated, used for manufacturing purposes or communicated to third party as a whole or partly, without the written consent of JQL Electronic Inc.

WEIGHT:

SHEET 1 OF 1