Document No.	QR4-700-T-003
REV.	A/0

REV.	DESCRIPTION	REVISOR	DATE	APPROVED
0		Hu.Jiang	10.08.2018	HC.Qiu

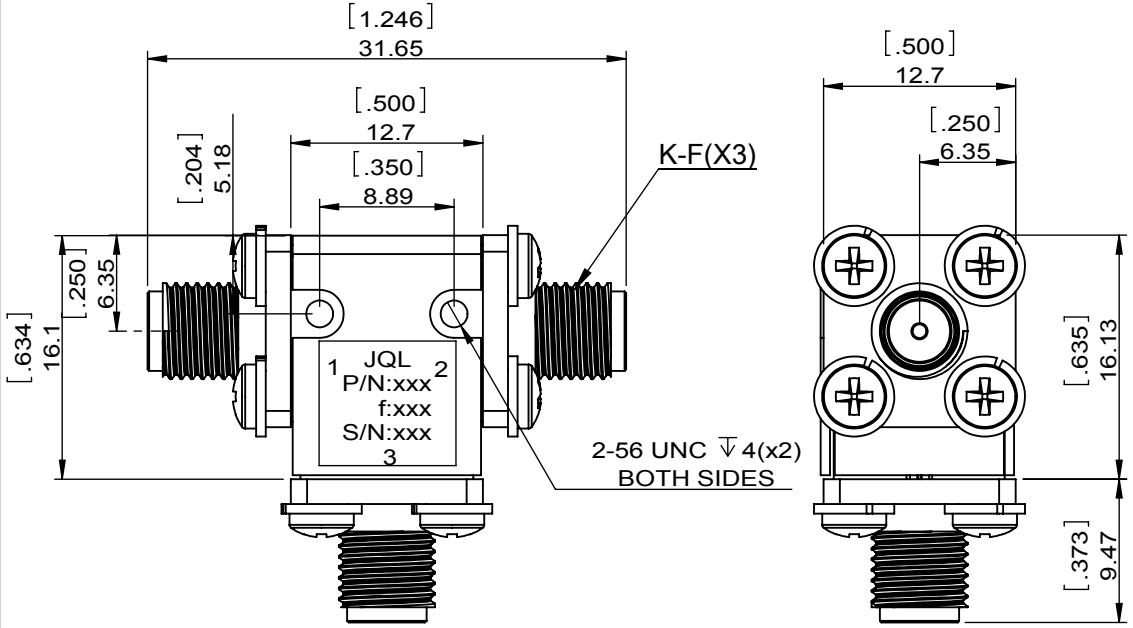

SPECIFICATIONS	
Part's Number	JCC22K0T27K0K1
Frequency(GHz)	22.000~27.000
Direction	-
Insertion Loss(dB)MAX	0.60
Isolation(dB)MIN	18.0
Return Loss(dB)MIN	18.0
3rd IMD(dBc)MAX	-
Power FWD/REV/PK(Watt)	10/10/-
Operating Temperature(°C)	-10~+70
Storage Temperature(°C)	-
2nd/3rd Harmonic(dBc)	-
Termination/Attenuator(Watt/dB)	-
Tab(W×LG×THK)(mm[Inch])	
Additional Notes	-

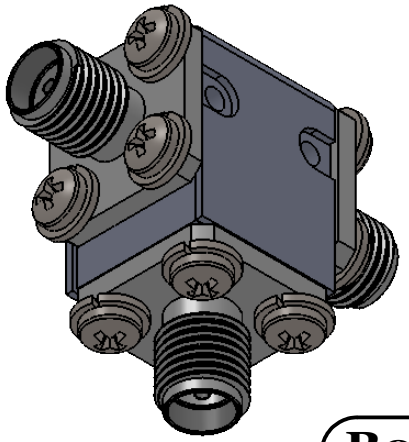

RoHS COMPLIANCE

This document is the property of JQL Electronic Inc.
It cannot be copied, duplicated, used for manufacturing purposes
or communicated to third party as a whole or partly,
without the written consent of JQL Electronic Inc.

JQL Electronic Inc

MATERIAL: STEEL	**DWG NO:** JCC22K0T27K0K1			
SURFACE TREATMENT: NICKEL PLATING	DWG BY:	Hu.Jiang	10.08.2018	SCALE
	CHK'D BY:			2:1
DESCRIPTION: COAX CIRCULATOR	APPV'D BY:			
	Unit: mm[inch]	Tolerance: Liner: ±0.25 Anguar: ±0.5°	The First:	A4

WEIGHT:

SHEET 1 OF 1