Document No.	QR4-700-T-003
REV.	A/0

REV.	DESCRIPTION	REVISER	DATE	APPROVED
0		Hu.Jiang	10.15.2018	HC.Qiu

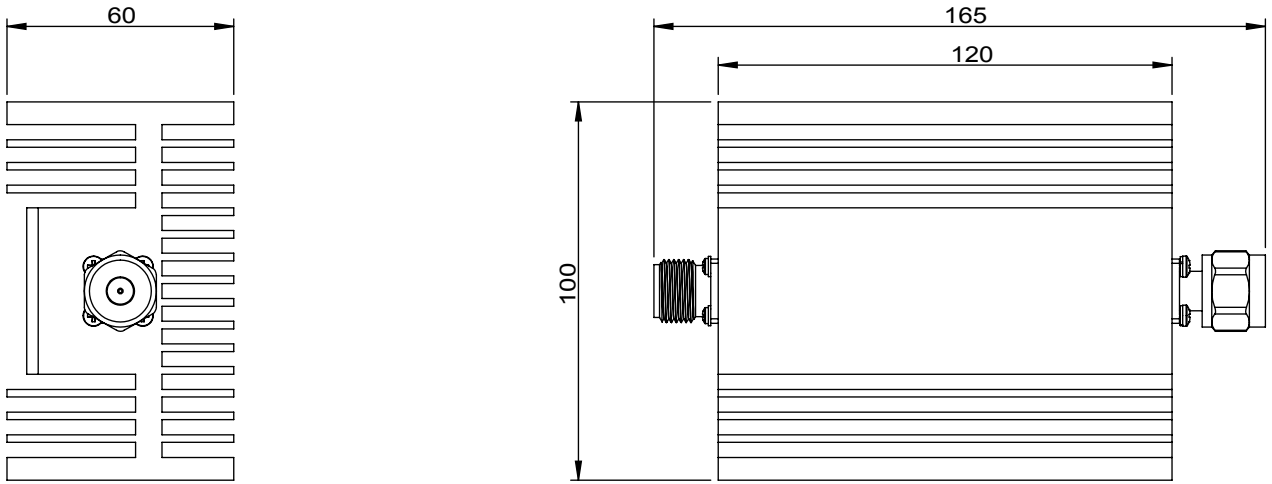

POWER DERATING GRAPHS

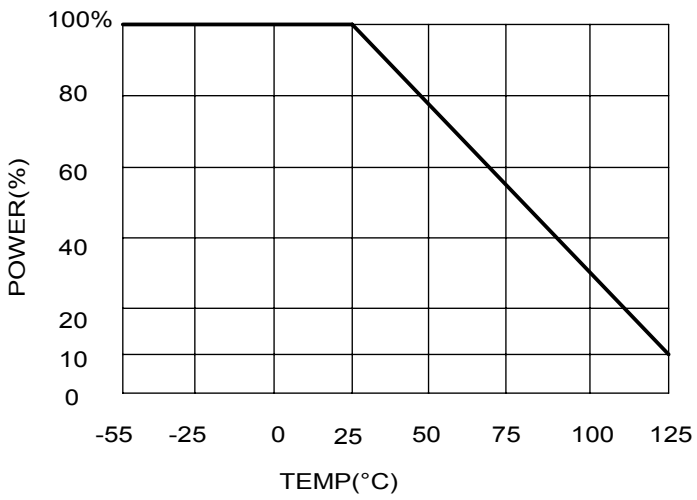

SPECIFICATIONS:
1.Frequency range: DC-4GHz
2.VSWR: 1.25:1 Max.
3.Attenuation value: 30dB
4.Attenuation Tolerance: ±1.0dB
5.Power Rating: 100W
6.Impedance: 50Ω
7.The connection method:NJ-NK
8.Temperature range: -55~+125°C.

RoHS COMPLIANCE

This document is the property of JQL Electronic Inc.
It cannot be copied, duplicated, used for manufacturing purposes
or communicated to third party as a whole or partly,
without the written consent of JQL Electronic Inc.

JQL Electronic Inc

MATERIAL: -	**DWG NO:** J-ATN-30-NMNF-100-0T4K0			
SURFACE TREATMENT: -	DWG BY:	Hu.Jiang	10.15.2018	SCALE
	CHK'D BY:			1:2
DESCRIPTION: ATTENUATORS	APPV'D BY:			
	Unit: mm[inch]	Tolerance: Liner: ±0.1mm Anguar: ±0.5°	The First:	A4

WEIGHT:

SHEET 1 OF 1