Document No.	QR4-700-T-003
REV.	A/0

REV.	DESCRIPTION	REVISOR	DATE	APPROVED
0		Hu.Jiang	01.30.2019	HC.Qiu

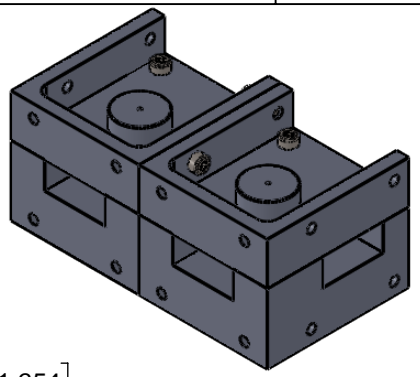

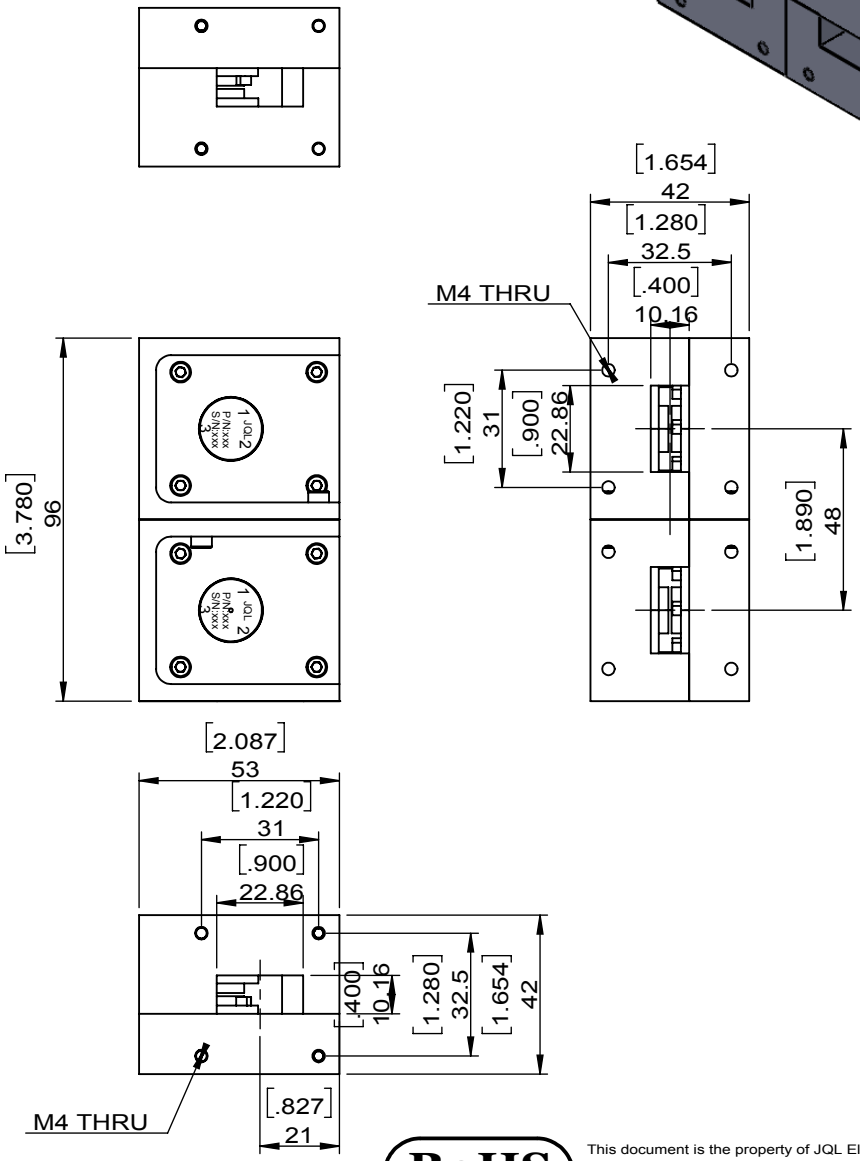

SPECIFICATIONS	
Part's Number	JC2WR90-96-8690T9220
Frequency(GHz)	8.690~9.220
Direction	
Insertion Loss(dB)MAX	0.6
Isolation(dB)MIN	44.0
Return Loss(dB)MIN	21.0
3rd IMD(dBc)MAX	-
Power FWD/REV/PK(Watt)	30/30/600 Duty cycle = up to 20%
Operating Temperature(°C)	-30~+95
Storage Temperature(°C)	-
2nd/3rd Harmonic(dBc)	-
Termination/Attenuator(Watt/dB)	-
Tab(W×LG×THK)(mm[Inch])	
Additional Notes	100usec pulse width

JQL Electronic Inc

MATERIAL: AL

SURFACE TREATMENT: CHEM FILM

DESCRIPTION: dual junction WG Circulator

DWG NO: JC2WR90-96-8690T9220

DWG BY:	Hu.Jiang	01.30.2019	SCALE
CHK'D BY:			1:2
APPV'D BY:			
Unit: mm[inch]	Tolerance: Liner: ±0.25 Anguar: ±0.5°	The First:	A4

RoHS COMPLIANCE

This document is the property of JQL Electronic Inc.
It cannot be copied, duplicated, used for manufacturing purposes or communicated to third party as a whole or partly, without the written consent of JQL Electronic Inc.

WEIGHT:

SHEET 1 OF 1