Document No.	QR4-700-T-003
REV.	A/0

REV.	DESCRIPTION	REVISOR	DATE	APPROVED
0		Hu.Jiang	01.28.2019	HC.Qiu

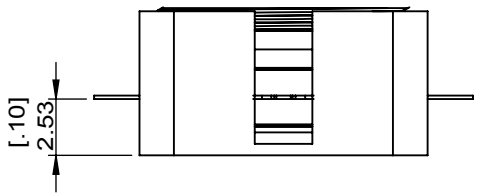

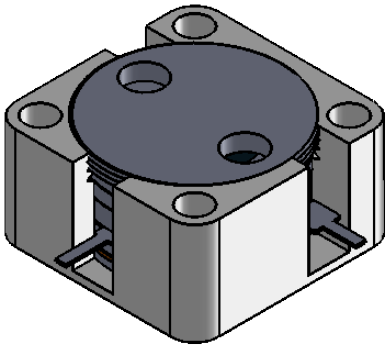

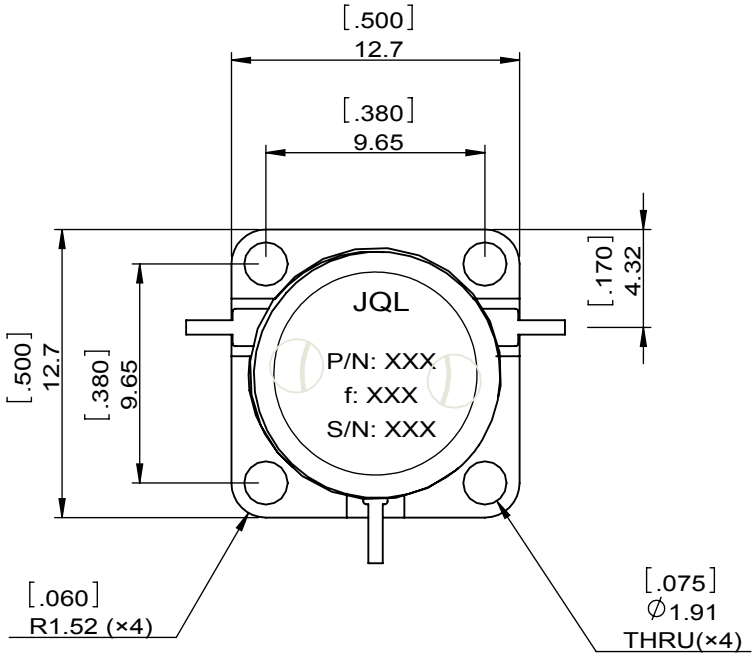

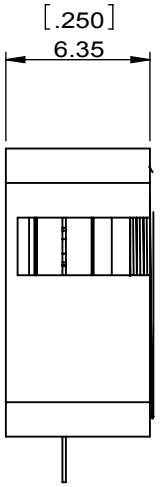

SPECIFICATIONS	
Part's Number	JCD8690T9220VM10
Frequency(GHz)	8.690~9.220
Direction	CW
Insertion Loss(dB)MAX	0.50
Isolation(dB)MIN	20.0
Return Loss(dB)MIN	19.0
3rd IMD(dBc)MAX	-
Power FWD/REV/PK(Watt)	-/-/100 Duty cycle = 20%
Operating Temperature(°C)	-40~+85
Storage Temperature(°C)	-
2nd/3rd Harmonic(dBc)	-
Termination/Attenuator(Watt/dB)	-
Tab(W×LG×THK)(mm[Inch])	.635[.03]×2.0[.078]×0.15[.006]
Additional Notes	Pulse width = 100usec

NOTES:
1.STANDARD INPUT/OUTPUT 50OHM IMPEDANCE
2.BEO FREE,LEAD FREE,NO Nd MATERIAL
3.RoHS COMPLIANT
4.S-PARAMETERS TO BE MEASURED BYCONECTING PORT 1 AND PORT 2 TO VNA,PORT 3 TO LOAD
5.LOAD RETURN LOSS IS 30dB OR HIGHER WHEN TUNING

RoHS COMPLIANCE

This document is the property of JQL Electronic Inc.
It cannot be copied, duplicated, used for manufacturing purposes or communicated to third party as a whole or partly, without the written consent of JQL Electronic Inc.

JQL Electronic Inc
500 Lake Cook Road, Suite 350
Deerfield, IL 60015, USA
Tel: 1(888)236-9828
Fax: 1(888)823-2902

MATERIAL: STEEL

SURFACE TREATMENT: NICKEL PLATING

DESCRIPTION: DROP-IN CIRCULATOR

DWG NO: JCD8690T9220VM10

DWG BY:	Hu.Jiang	01.28.2019	SACLE
CHK'D BY:			3:1
APPV'D BY:			
Unit: mm[inch]	Tolerance: Liner: ±0.25 Anguar: ±0.5°	The First:	A4

WEIGHT:

SHEET 1 OF 1