| Document No. | QR4-700-T-003 |
|---|---|
| REV. | A/0 |

| REV. | DESCRIPTION | REVISOR | DATE | APPROVED |
|---|---|---|---|---|
| 0 | | Hu.Jiang | 06.03.2020 | HC.Qiu |

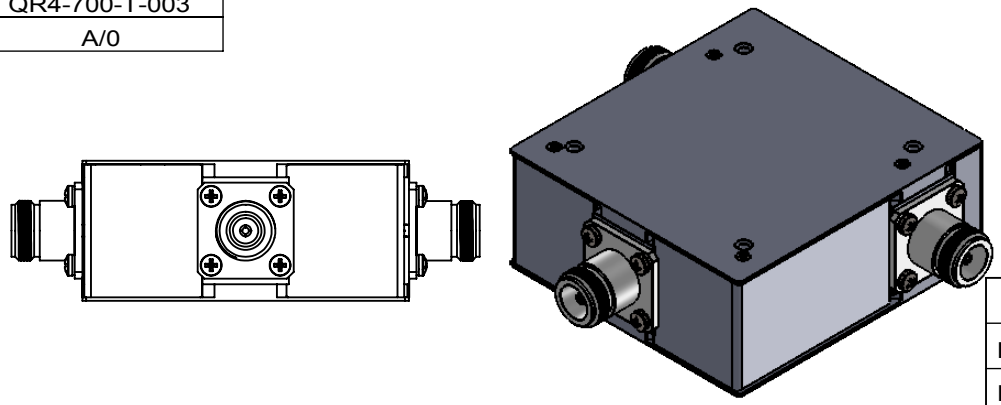

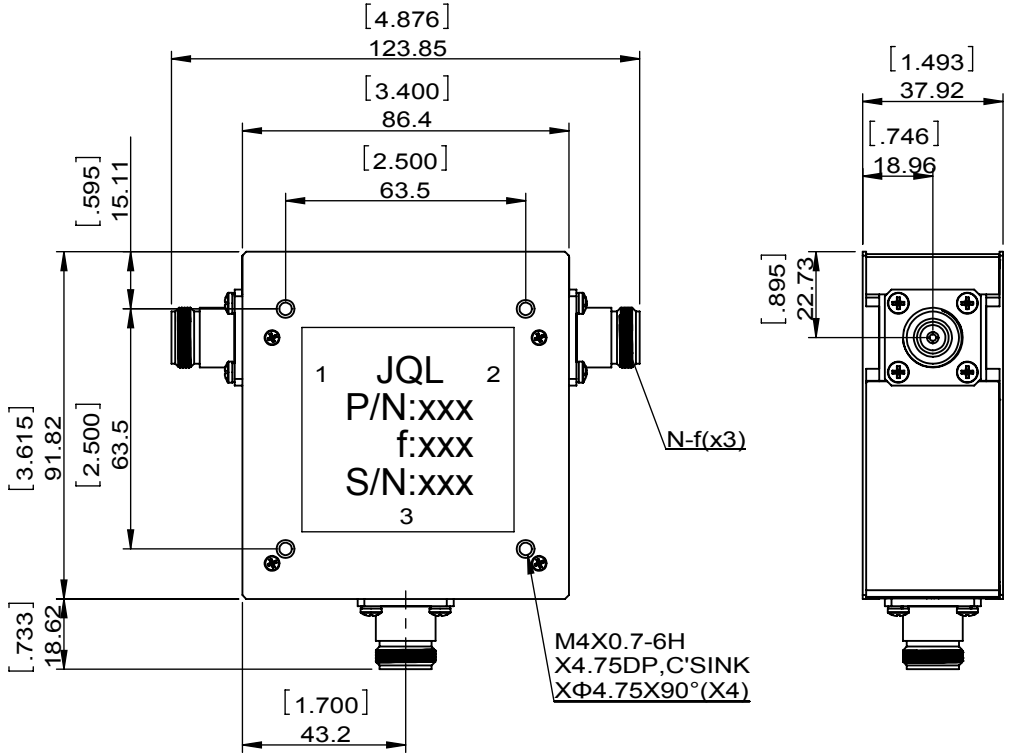


SPECIFICATIONS

| | |
|---|---|
| Part's Number | JCC0118T0137N10F |
| Frequency(GHz) | 0.118~0.137 |
| | |
| Direction | - |
| Insertion Loss(dB)MAX | 0.5 |
| Isolation(dB)MIN | 20.0 |
| Return Loss(dB)MIN | 20.0 |
| 3rd IMD(dBc)MAX | - |
| Power FWD/REV/PK(Watt) | 100/100/- |
| Operating Temperature(°C) | +20~+40 |
| Storage Temperature(°C) | - |
| 2nd/3rd Harmonic(dBc) | - |
| Termination/Attenuator(Watt/dB) | - |
| Tab(W×LG×THK)(mm[Inch]) | |
| Additional Notes | - |

**JQL Electronic Inc**

**MATERIAL:** STEEL

**DWG NO:** JCC0118T0137N10F

**SURFACE TREATMENT:** NICKEL PLATING

**DESCRIPTION:** COAXIAL CIRCULATOR

| | | | |
|---|---|---|---|
| DWG BY: | Hu.Jiang | 06.03.2020 | SCALE |
| CHK'D BY: | | | 1:2 |
| APPV'D BY: | | | |
| Unit: mm[inch] | Tolerance: Liner: ±0.25 Anguar: ±0.5° | The First: | A4 |

RoHS COMPLIANCE

This document is the property of JQL Electronic Inc.
It cannot be copied, duplicated, used for manufacturing purposes or communicated to third party as a whole or partly, without the written consent of JQL Electronic Inc.

WEIGHT:

SHEET 1 OF 1