Document No.	QR4-700-T-003
REV.	A/0

REV.	DESCRIPTION	REVISOR	DATE	APPROVED
0		YL.Chen	12.19.2018	HC.Qiu
1	Change 2.0 to 3.0	YL.Chen	01.10.2019	HC.Qiu

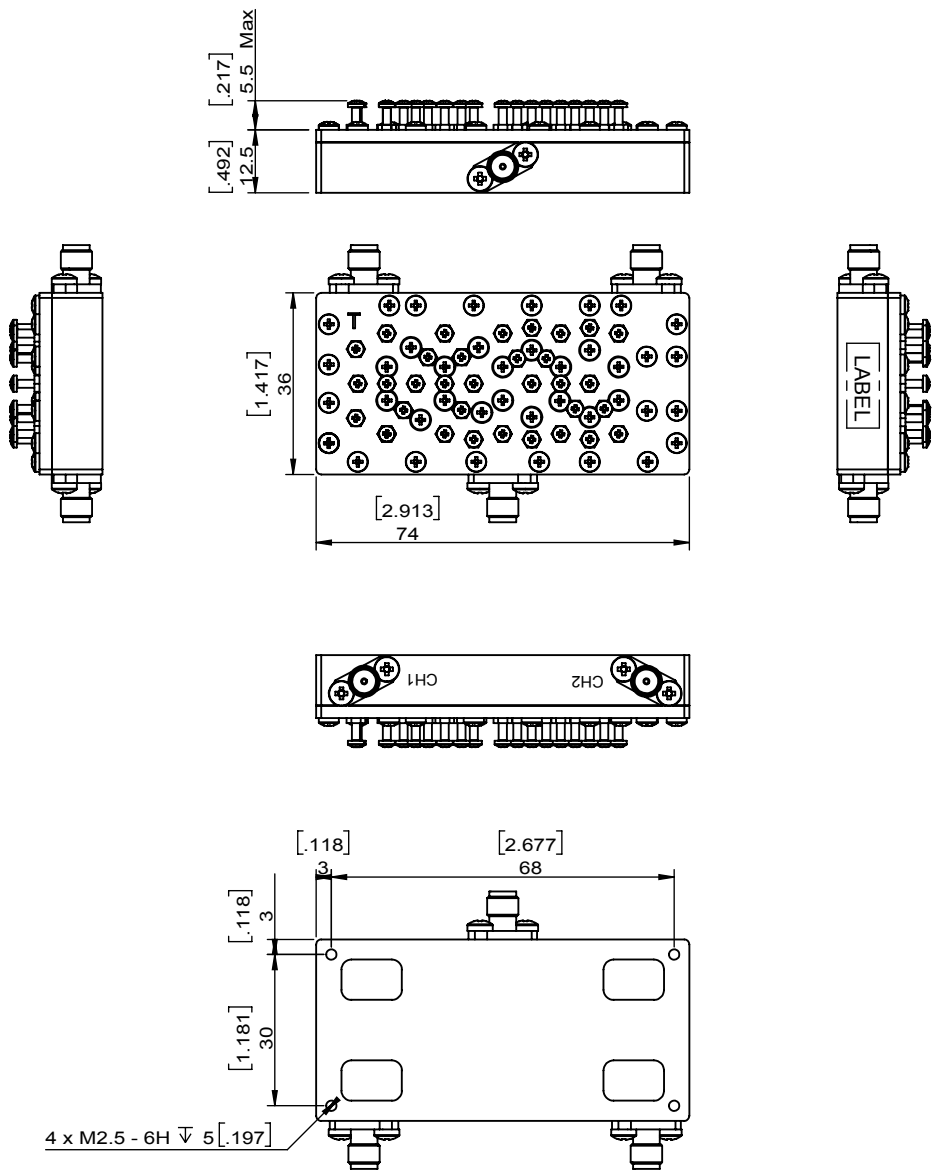

ITEM	SPECIFICATIONS	
	CH1	CH2
Frequency(GHz)	14.4~14.83	15.15~15.35
Insertion Loss(dB)	1.8 Max Over Temp.Range	
Ripple(dB)	0.8 p.t.p Max	
Rejection(dBc)	15 Typ@14.99GHz 30 Min@13 ~ 14GHz 100 Min@15.15 ~ 15.35GHz	15 Typ@14.99GHz 30 Min@16 ~ 16.5GHz 100 Min@14.4 ~ 14.83GHz
Return Loss(dB)	14 Min	
Impedance(Ω)	50	
Power handing(W)	10 Min @ sea level	
Group Delay Variation	3.0nSec p.t.p Max(Within any 100MHz band)	
Shock	20G 11msec sawtooth	
Vibration Operational Vibration Endurance	8Grms(10 ~ 2000Hz) 18Grms(10 ~ 2000Hz)	
Temperature(℃)	-40~+85	
Connector	SMA Female	
Notes	1.The filter will be designed to handle an operating power of 25W max @ 50,000 Feet 2.ATR will be attached to each unit 3.The channels will be labelled as indicated at the drawing attached 4.Each unit will be labelled with model & serial No.	

JQL Electronic Inc

MATERIAL:

SURFACE TREATMENT:
Silver Plating

DESCRIPTION:
Filter

DWG NO:
JFCD14K4T15K3SFR

DWG BY:	YL.Chen	01.10.2019	SCALE
CHK'D BY:			1:1
APPV'D BY:			
Unit: mm[inch]	Tolerance: Liner: ±0.25 Anguar: ±0.5°	The First:	A4

RoHS COMPLIANCE

This document is the property of JQL Electronic Inc.
It cannot be copied, duplicated, used for manufacturing purposes or communicated to third party as a whole or partly, without the written consent of JQL Electronic Inc.

WEIGHT:

SHEET 1 OF 1