Document No.	QR4-700-T-003
REV.	A/0

REV.	DESCRIPTION	REVISOR	DATE	APPROVED
0		J.Z	12.29.2021	HC.Qiu

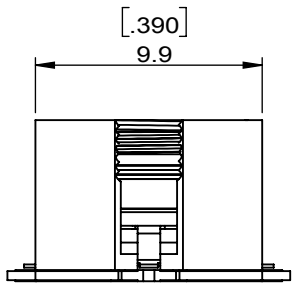

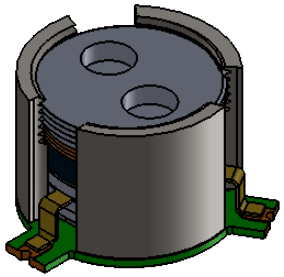

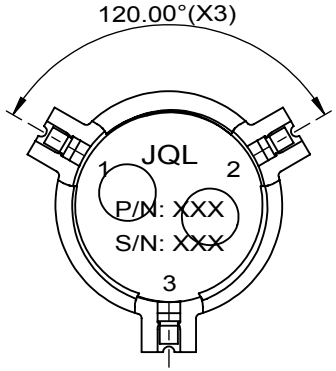

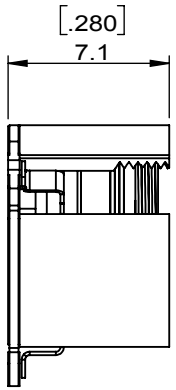

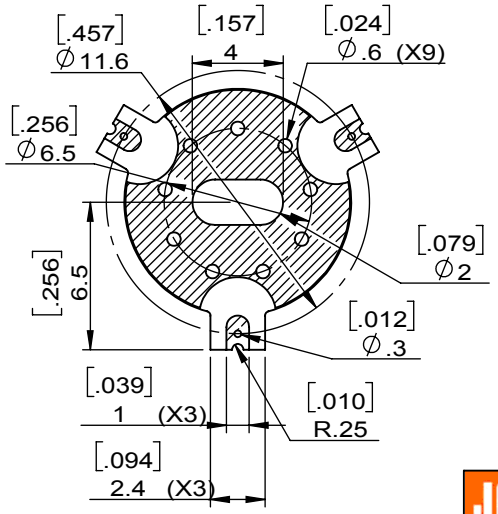

SPECIFICATIONS	
Part's Number	JCM2900T3100TB1
Frequency(GHz)	2.900~3.100
Direction	CW
Insertion Loss(dB)MAX	0.35
Isolation(dB)MIN	20.0
Return Loss(dB)MIN	20.0
3rd IMD(dBc)MAX	-
Power FWD/REV/PK(Watt)	-/-/240 , 500usec, 20% Duty Cycle.
Operating Temperature(°C)	-40~+110
Storage Temperature(°C)	-
2nd/3rd Harmonic(dBc)	
Tab(W×LG×THK)(mm[Inch])	
Additional Notes	

JQL Technologies Corporation.

MATERIAL: STEEL

DWG NO: JCM2900T3100TB1

SURFACE TREATMENT: SILVER PLATING

DESCRIPTION: SMT CIRCULATOR

DWG BY:	J.Z	12.29.2021	SCALE
CHK'D BY:			3:1
APPV'D BY:			
Unit: mm[inch]	Tolerance: Liner: ±0.25 Anguar: ±0.5°	The First:	A4

RoHS COMPLIANCE

This document is the property of JQL Technologies Corporation. It cannot be copied, duplicated, used for manufacturing purposes or communicated to third party as a whole or partly, without the written consent of JQL Technologies Corporation.

WEIGHT:

SHEET 1 OF 1