Document No.	QR4-700-T-003
REV.	A/0

REV.	DESCRIPTION	REVISOR	DATE	APPROVED
SK0		J.Z	07.06.2022	HC.Qiu

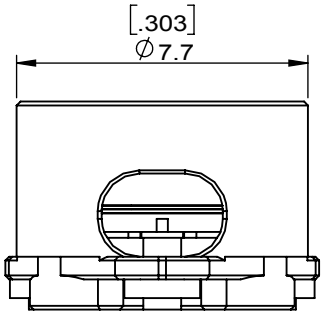

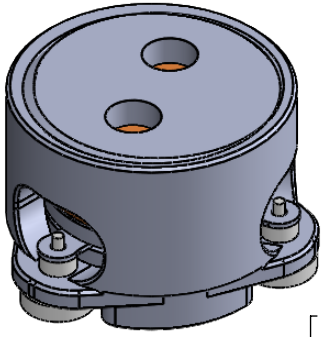

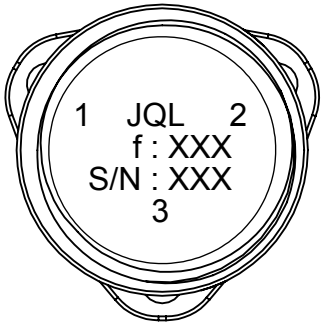

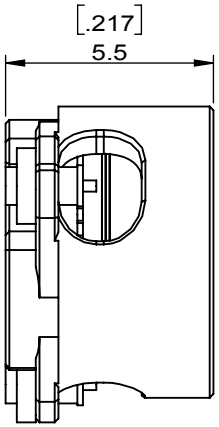

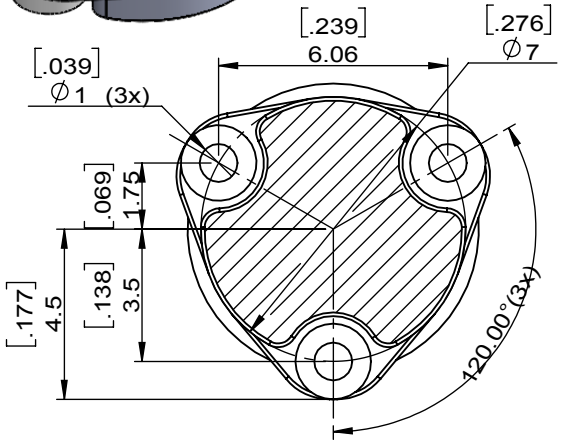

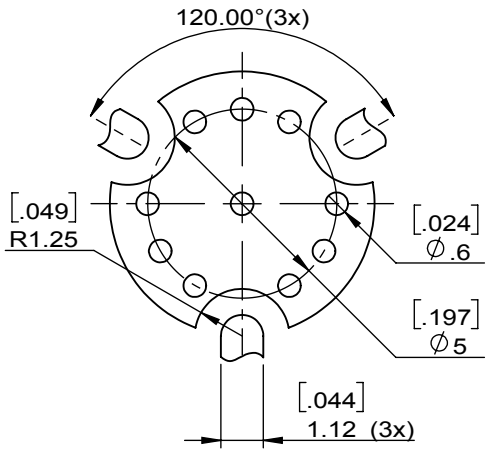

Copper Pattern

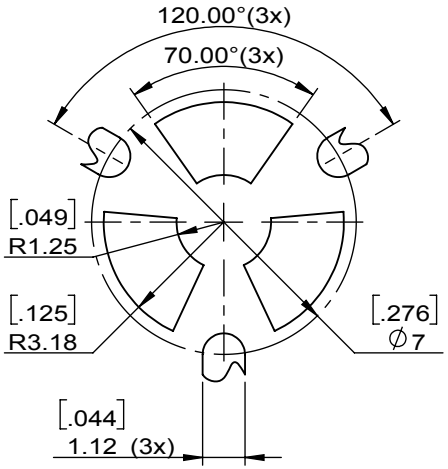

Soldermask Pattern

SPECIFICATIONS	
Part's Number	JCM2496T2690LM2
Frequency(GHz)	2.496~2.690
Direction	CW
Insertion Loss(dB)MAX	0.50 @+25℃ 0.55 @-40~+85℃
Isolation(dB)MIN	18.0 @+25℃ 16.0 @-40~+85℃
Return Loss(dB)MIN	18.0 @+25℃ 16.0 @-40~+85℃
3rd IMD	-60 @ 2x34dBm, 5MHz Spacing
Power FWD/REV/PK(Watt)	20/20/100
Operating Temperature(°C)	-40~+85
Storage Temperature(℃)	-40~+100
2nd/3rd Harmonic(dBc)	-
Phase flatness vs. frequency	-
Additional Notes	-

RoHS COMPLIANCE

This document is the property of JQL Technologies Corporation. It cannot be copied, duplicated, used for manufacturing purposes or communicated to third party as a whole or partly, without the written consent of JQL Technologies Corporation.

JQL Technologies Corporation

MATERIAL: STEEL

SURFACE TREATMENT: SILVER PLATING

DESCRIPTION: SMT CIRCULATOR

DWG NO: JCM2496T2690LM2

DWG BY:	J.Z	07.06.2022	SCALE
CHK'D BY:			5:1
APPV'D BY:			
Unit: mm[inch]	Tolerance: Liner: ±0.25 Anguar: ±0.5°	The First:	A4

WEIGHT:

SHEET 1 OF 1