Document No.	QR4-700-T-003
REV.	A/0

REV.	DESCRIPTION	REVISOR	DATE	APPROVED
0		X.S	12.14.2021	HC.Qiu

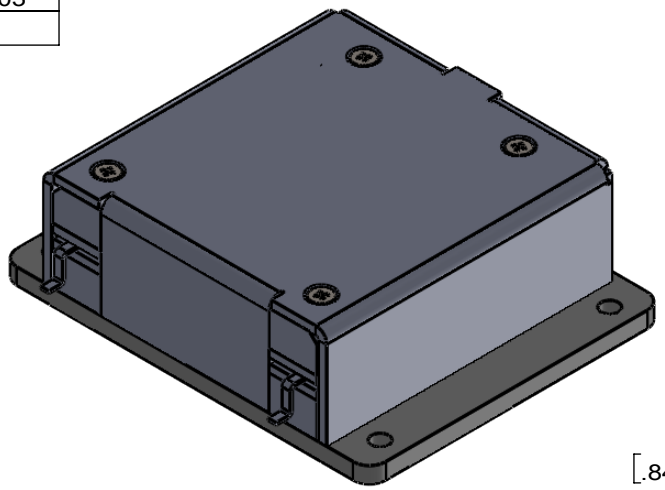

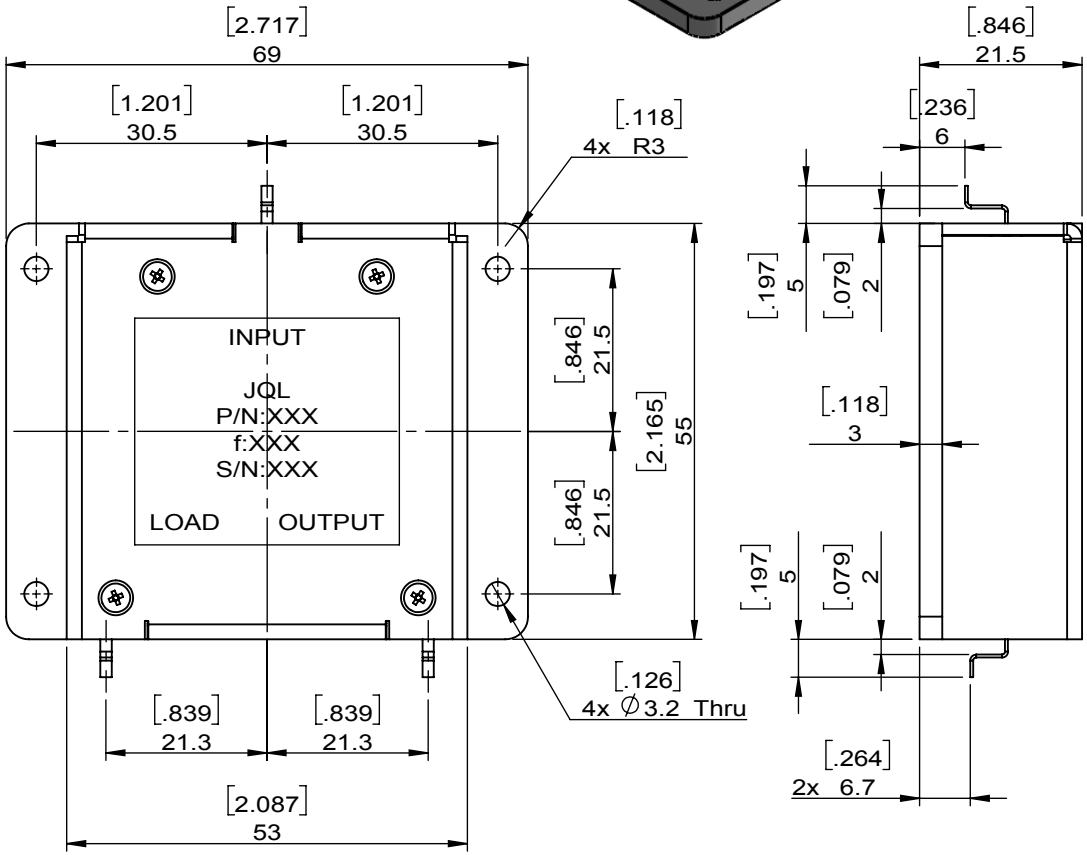

SPECIFICATIONS	
Part's Number	JCD0490T0510U80R
Frequency(GHz)	0.490~0.510
Direction	CW
Insertion Loss(dB)MAX	0.25 @ +25℃ 0.30 @ +25~+100℃
Isolation(dB)MIN	25.0 @ +25℃ 23.0 @ +25~+100℃
Return Loss(dB)MIN	21.0
3rd IMD(dBc)MAX	-
Power FWD/REV/PK(Watt)	800/800/-
Operating Temperature(°C)	+25~+100
Storage Temperature(°C)	-
2nd/3rd Harmonic(dBc)	-
Tab(W×LG×THK)(mm[Inch])	1.5[.059]X5.0[0.197]X0.4[0.016]
Additional Notes	All ports use teflon or ceramic pads

JQL Technologies Corporation

MATERIAL: STEEL

DWG NO: JCD0490T0510U80R

SURFACE TREATMENT: Nickel Plating

DESCRIPTION: DROP-IN CIRCULATOR

DWG BY:	X.S	12.14.2021	SCALE
CHK'D BY:			1:1
APPV'D BY:			
Unit: mm[inch]	Tolerance: Liner: ±0.25 Anguar: ±0.5°	The First:	A4

RoHS COMPLIANCE

This document is the property of JQL Technologies Corporation. It cannot be copied, duplicated, used for manufacturing purposes or communicated to third party as a whole or partly, without the written consent of JQL Technologies Corporation.

WEIGHT:

SHEET 1 OF 1