Document No.	QR4-700-T-003
REV.	A/0

REV.	DESCRIPTION	REVISOR	DATE	APPROVED
0		YL.Chen	09.28.2022	HC.Qiu

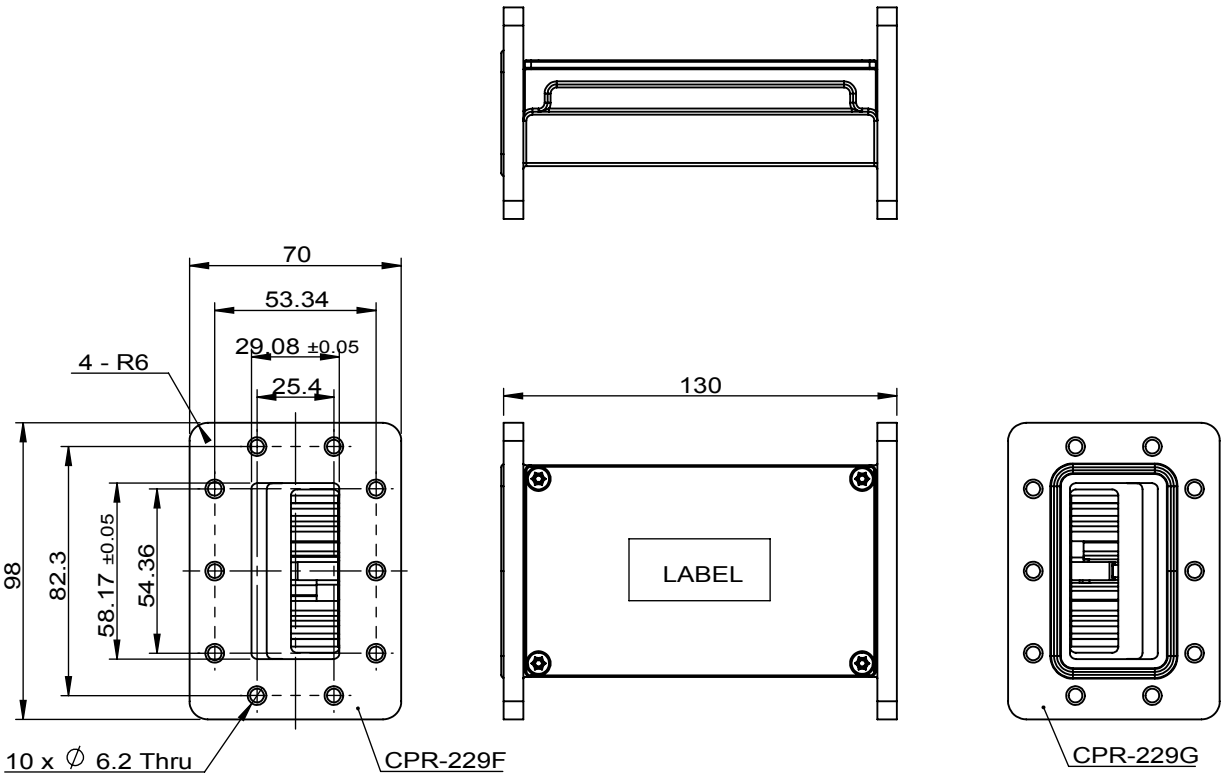

ITEM	SPECIFICATIONS
Frequency(MHz)	3700~4200
Insertion Loss(dB)	1.5Max 0.5 Max@Center Band
Return Loss(dB)	16.1 Min ; 17 Typ
Rejection(dB)	60 Min @ 3500MHz 60 Min @ 3600MHz 60 Min @ 3670MHz 60 Min @ 3680MHz 30 Min @ 4230MHz 40 Min @ 4250MHz
Group Delay Ripple(ns)	15 Max in 5MHz
Ingress Protection	IP67
Temperature(°C)	-40~+60
Flanges	Input CPR-229G Output CPR-229F
Notes	

JQL Technologies Corporation

MATERIAL:

DWG NO: JFCB3700T4200WR229-13

SURFACE TREATMENT: Painted White RAL9003

DESCRIPTION: Filter

DWG BY:	YL.Chen	09.28.2022	SCALE
CHK'D BY:			1:2.5
APPV'D BY:			
Unit: mm[inch]	Tolerance: Liner: ±0.25 Anguar: ±0.5°	The First:	A4

RoHS COMPLIANCE

This document is the property of JQL Electronic Inc.
It cannot be copied, duplicated, used for manufacturing purposes or communicated to third party as a whole or partly, without the written consent of JQL Electronic Inc.

WEIGHT:

SHEET 1 OF 1