Document No.	QR4-700-T-003
REV.	A/0

REV.	DESCRIPTION	REVISOR	DATE	APPROVED
0		J.Z	01.04.2023	HC.Qiu

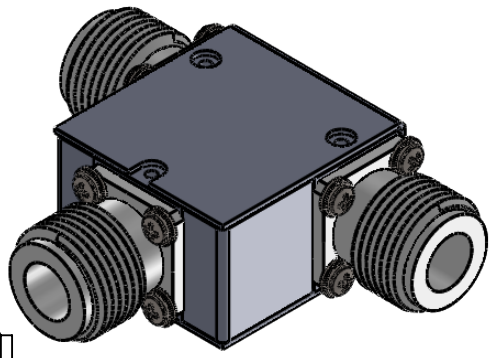

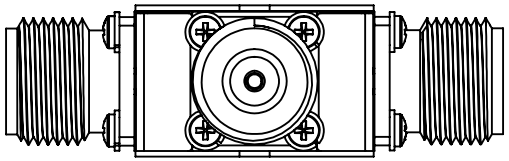

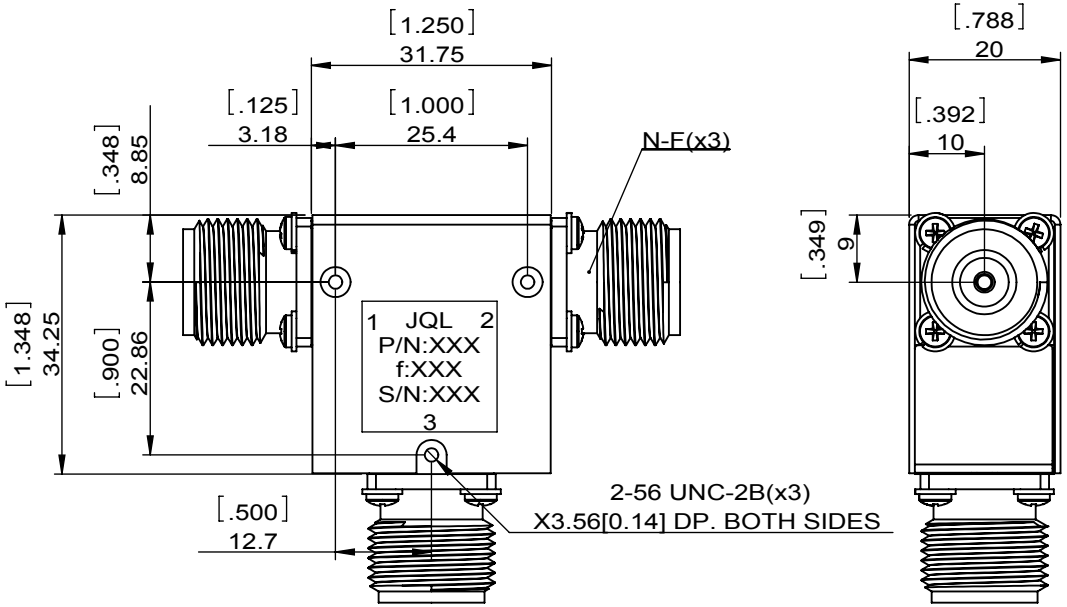

SPECIFICATIONS	
Part's Number	JCC3000T6000NF20
Frequency(GHz)	3.000~6.000
Direction	-
Insertion Loss(dB)MAX	0.5
Isolation(dB)MIN	18.0
Return Loss(dB)MIN	18.0
3rd IMD(dBc)MAX	-
Power FWD/REV/PK(Watt)	-/-/200
Operating Temperature(°C)	0~+60
Storage Temperature(°C)	-
2nd/3rd Harmonic(dBc)	-
Termination/Attenuator(Watt/dB)	-
Tab(W×LG×THK)(mm[Inch])	-
Additional Notes	-

JQL Technologies Corporation.

MATERIAL: STEEL	**DWG NO:** JCC3000T6000NF20			
SURFACE TREATMENT: NICKEL PLATING	DWG BY:	J.Z	01.04.2023	SCALE
	CHK'D BY:			1:1
DESCRIPTION:	APPV'D BY:			
COAXIAL CIRCULATOR	Unit: mm[inch]	Tolerance: Liner: ±0.25 Anguar: ±0.5°	The First:	A4

RoHS COMPLIANCE

This document is the property of JQL Technologies Corporation. It cannot be copied, duplicated, used for manufacturing purposes or communicated to third party as a whole or partly, without the written consent of JQL Technologies Corporation.

WEIGHT:

SHEET 1 OF 1